Excellent Integrated System Limited

Stocking Distributor

Click to view price, real time Inventory, Delivery & Lifecycle Information:

ON Semiconductor
NSVD4001DR2G

For any questions, you can email us directly:
sales@integrated-circuit.com

NUD4001, NSVD4001

High Current LED Driver

This device is designed to replace discrete solutions for driving LEDs in low voltage AC–DC applications 5.0 V, 12 V or 24 V. An external resistor allows the circuit designer to set the drive current for different LED arrays. This discrete integration technology eliminates individual components by combining them into a single package, which results in a significant reduction of both system cost and board space. The device is a small surface mount package (SO–8).

Features

- Supplies Constant LED Current for Varying Input Voltages
- External Resistor Allows Designer to Set Current – up to 500 mA
- Offered in Surface Mount Package Technology (SO–8)
- AEC–Q101 Qualified and PPAP Capable
- NSV Prefix for Automotive and Other Applications Requiring Unique Site and Control Change Requirements
- Pb–Free Package is Available

Benefits

- Maintains a Constant Light Output During Battery Drain
- One Device can be used for Many Different LED Products
- Reduces Board Space and Component Count
- Simplifies Circuit and System Designs

Typical Applications

- Portables: For Battery Back–up Applications, also Simple Ni–CAD Battery Charging
- Industrial: Low Voltage Lighting Applications and Small Appliances
- Automotive: Tail Lights, Directional Lights, Back–up Light, Dome Light

PIN FUNCTION DESCRIPTION

Pin	Symbol	Description
1	V_{in}	Positive input voltage to the device
2	Boost	This pin may be used to drive an external transistor as described in the App Note AND8198/D.
3	R_{ext}	An external resistor between R_{ext} and V_{in} pins sets different current levels for different application needs
4	GND	Ground
5, 6, 7, 8	I_{out}	The LEDs are connected from these pins to ground

ON Semiconductor®

http://onsemi.com

PIN CONFIGURATION AND SCHEMATIC

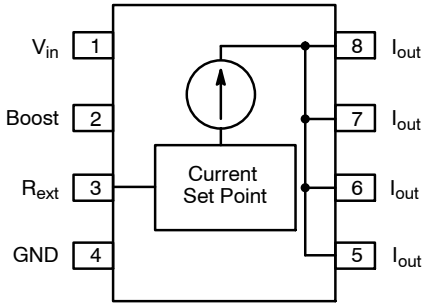

MARKING DIAGRAM

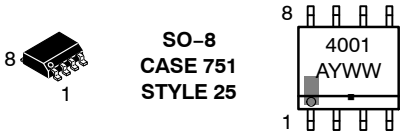

4001 = Specific Device Code
A = Assembly Location
Y = Year
WW = Work Week
▪ = Pb–Free Device

ORDERING INFORMATION

Device	Package	Shipping†
NUD4001DR2	SO–8	2500 / Tape & Reel
NUD4001DR2G	SO–8 (Pb–Free)	2500 / Tape & Reel
NSVD4001DR2G	SO–8 (Pb–Free)	2500 / Tape & Reel

†For information on tape and reel specifications, including part orientation and tape sizes, please refer to our Tape and Reel Packaging Specification Brochure, BRD8011/D.

© Semiconductor Components Industries, LLC, 2011

MAXIMUM RATINGS (T_A = 25°C unless otherwise noted)

Rating	Symbol	Value	Unit
Continuous Input Voltage	V_{in}	30	V
Non−repetitive Peak Input Voltage (t ≤ 1.0 ms)	V_p	60	V
Output Current (For $V_{drop} \leq 2.2$ V) (Note 1)	I_{out}	500	mA
Output Voltage	V_{out}	28	V
Human Body Model (HBM)	ESD	1000	V

Stresses exceeding Maximum Ratings may damage the device. Maximum Ratings are stress ratings only. Functional operation above the Recommended Operating Conditions is not implied. Extended exposure to stresses above the Recommended Operating Conditions may affect device reliability.

1. $V_{drop} = V_{in} - 0.7\ V - V_{LEDs}$.

THERMAL CHARACTERISTICS

Characteristic	Symbol	Value	Unit
Operating Ambient Temperature	T_A	−40 to +125	°C
Maximum Junction Temperature	T_J	150	°C
Storage Temperature	T_{STG}	−55 to +150	°C
Total Power Dissipation (Note 2) Derating above 25°C (Figure 3)	P_D	1.13 9.0	W mW/°C
Thermal Resistance, Junction−to−Ambient (Note 2)	$R_{\theta JA}$	110	°C/W
Thermal Resistance, Junction−to−Lead (Note 2)	$R_{\theta JL}$	77	°C/W

2. Mounted on FR−4 board, 2 in sq pad, 2 oz coverage.

ELECTRICAL CHARACTERISTICS (T_A = 25°C unless otherwise noted)

Characteristic	Symbol	Min	Typ	Max	Unit
Output Current1 (V_{in} = 12 V, R_{ext} = 2.0 Ω, V_{LEDs} = 10 V)	I_{out1}	305	325	345	mA
Output Current2 (V_{in} = 30 V, R_{ext} = 7.0 Ω, V_{LEDs} = 24 V)	I_{out2}	95	105	115	mA
Bias Current (V_{in} = 12 V, R_{ext} = Open, V_{LEDs} = 10 V)	I_{Bias}	–	5.0	8.0	mA
Voltage Overhead (Note 3)	V_{over}	1.4	–	–	V

3. $V_{over} = V_{in} - V_{LEDs}$.

TYPICAL PERFORMANCE CURVES

(T_A = 25°C unless otherwise noted)

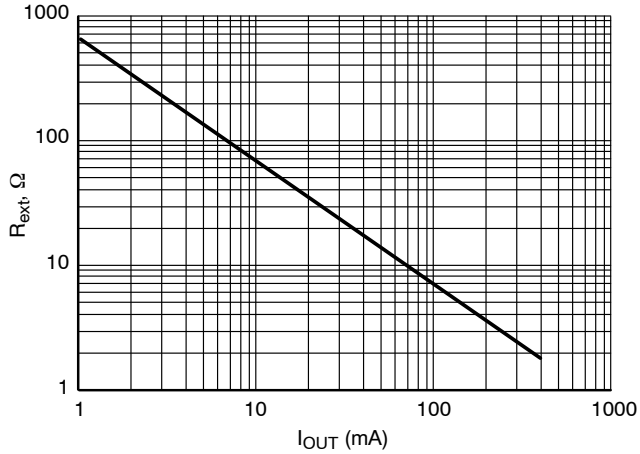

Figure 1. Output Current (I_{OUT}) vs. External Resistor (R_{ext})

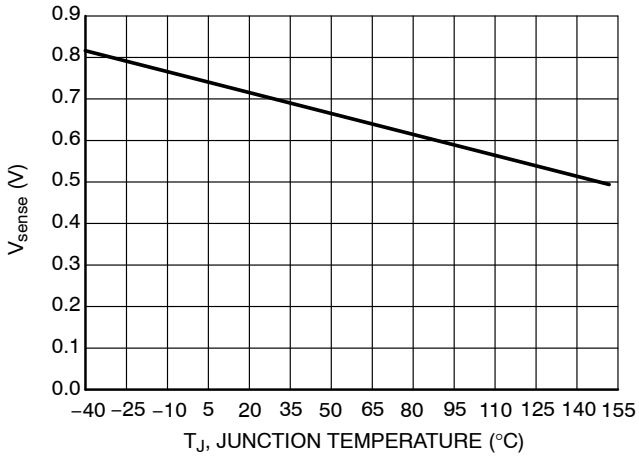

Figure 2. V_{sense} vs. Junction Temperature

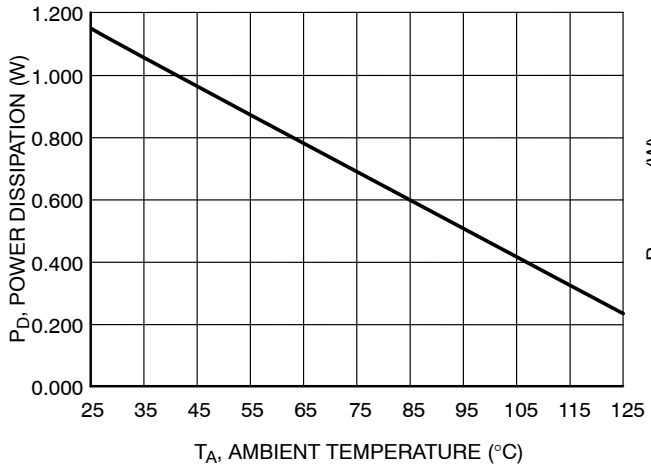

Figure 3. Total Power Dissipation (P_D) vs. Ambient Temperature (T_A)

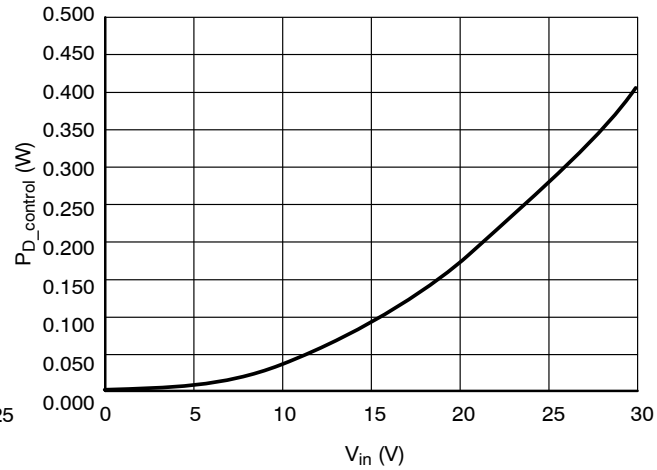

Figure 4. Internal Circuit Power Dissipation vs. Input Voltage

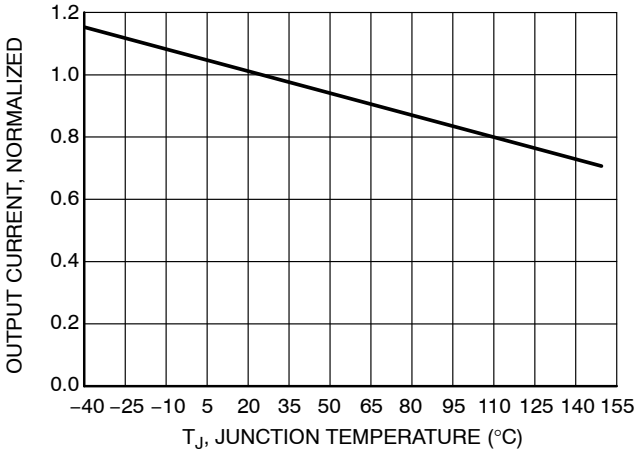

Figure 5. Current Regulation vs. Junction Temperature

APPLICATION INFORMATION

Design Guide

1. Define LED's current:
   a. I_{LED} = 350 mA

2. Calculate Resistor Value for R_{ext}:
   a. $R_{ext} = V_{sense}$ (see Figure 2) / I_{LED}
   b. R_{ext} = 0.7 (T_J = 25 °C)/ 0.350 = 2.0 Ω

3. Define V_{in}:
   a. Per example in Figure 6, V_{in} = 12 V

4. Define V_{LED} @ I_{LED} per LED supplier's data sheet:
   a. Per example in Figure 6,
   V_{LED} = 3.5 V + 3.5 V + 3.5 V = 10.5 V

5. Calculate V_{drop} across the NUD4001 device:
   a. $V_{drop} = V_{in} - V_{sense} - V_{LED}$
   b. V_{drop} = 12 V – 0.7 V (T_J = 25 °C) – 10.5 V
   c. V_{drop} = 0.8 V

6. Calculate Power Dissipation on the NUD4001 device's driver:
   a. $P_{D_driver} = V_{drop} * I_{out}$
   b. P_{D_driver} = 0.8 V x 0.350 A
   c. P_{D_driver} = 0.280 Watts

7. Establish Power Dissipation on the NUD4001 device's control circuit per Figure 4:
   a. $P_{D_control}$ = Figure 4, for 12 V input voltage
   b. $P_{D_control}$ = 0.055 W

8. Calculate Total Power Dissipation on the device:
   a. $P_{D_total} = P_{D_driver} + P_{D_control}$
   b. P_{D_total} = 0.280 W + 0.055 W = 0.335 W

9. If P_{D_total} > 1.13 W (or derated value per Figure 3), then select the most appropriate recourse and repeat steps 1 through 8:
   a. Reduce V_{in}
   b. Reconfigure LED array to reduce V_{drop}
   c. Reduce I_{out} by increasing R_{ext}
   d. Use external resistors or parallel device's configuration (see application note AND8156)

10. Calculate the junction temperaure using the thermal information on Page 7 and refer to Figure 5 to check the output current drop due to the calculated junction temperature. If desired, compensate it by adjusting the value of R_{ext}.

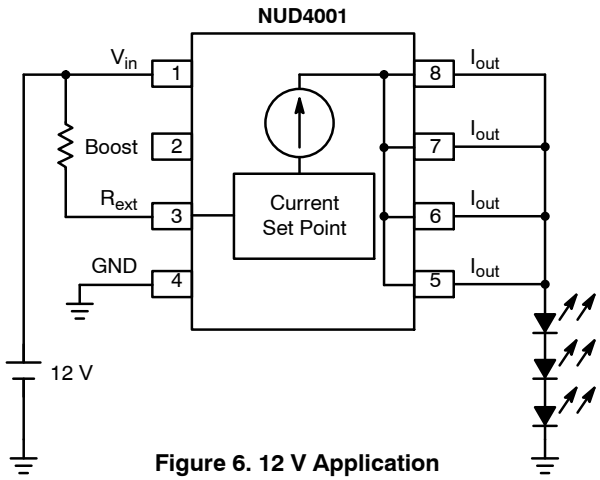

Figure 6. 12 V Application (Series LED's Array)

TYPICAL APPLICATION CIRCUITS

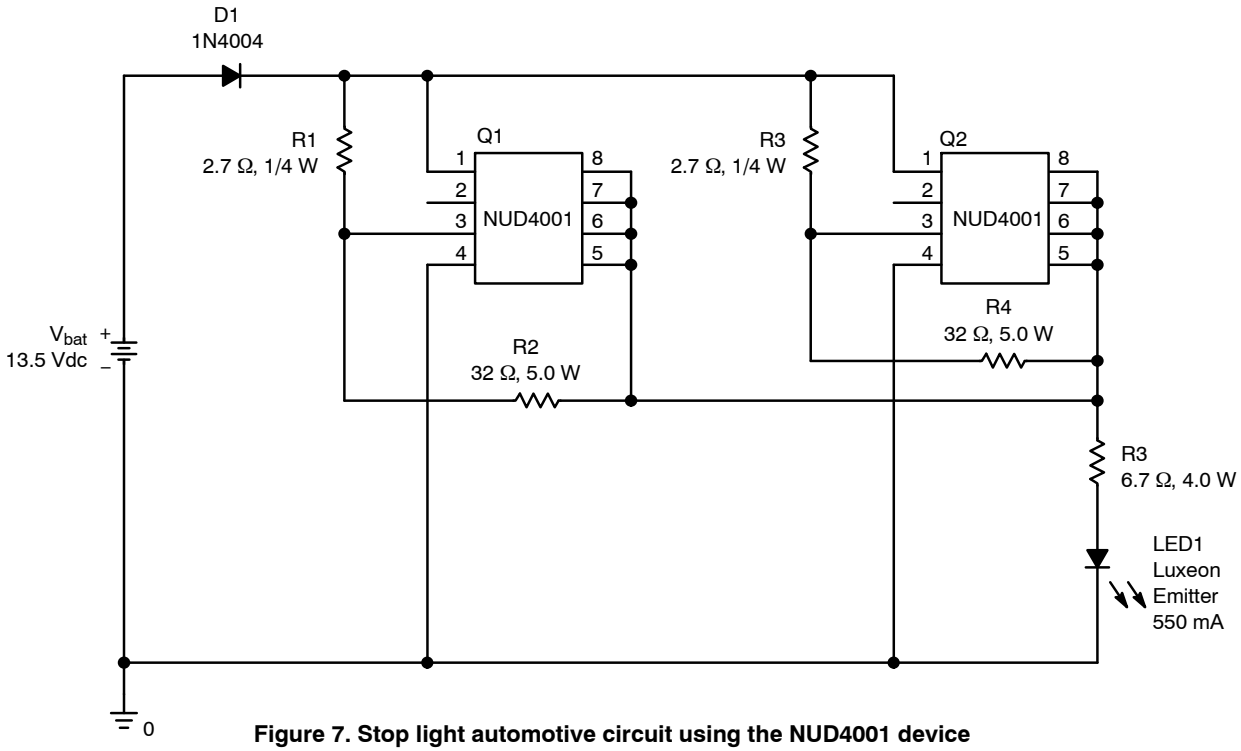

Figure 7. Stop light automotive circuit using the NUD4001 device to drive one high current LED (550 mA).

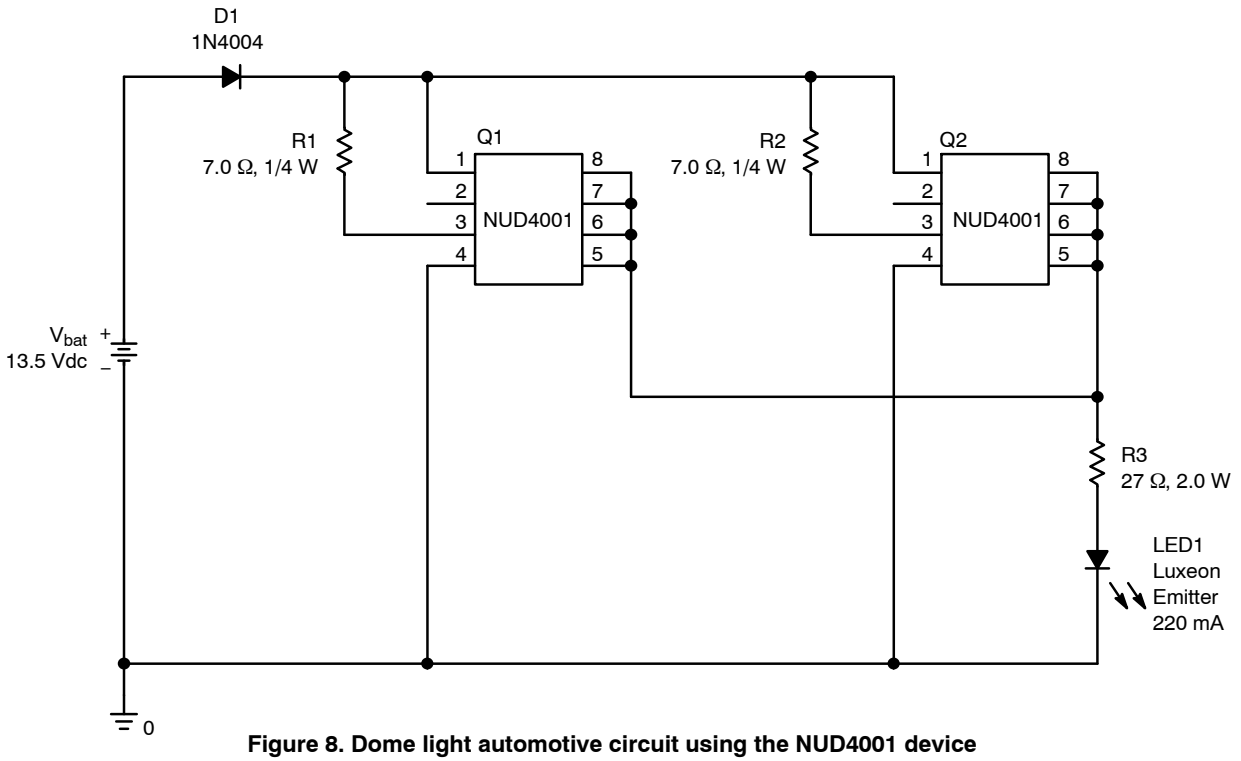

Figure 8. Dome light automotive circuit using the NUD4001 device to drive one LED (220 mA).

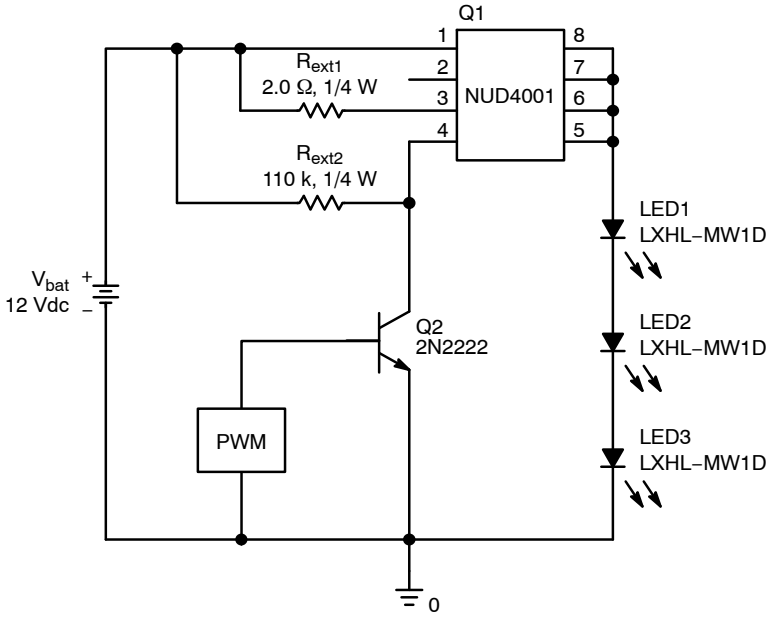

Figure 9. NUD4001 Device Configuration for PWM

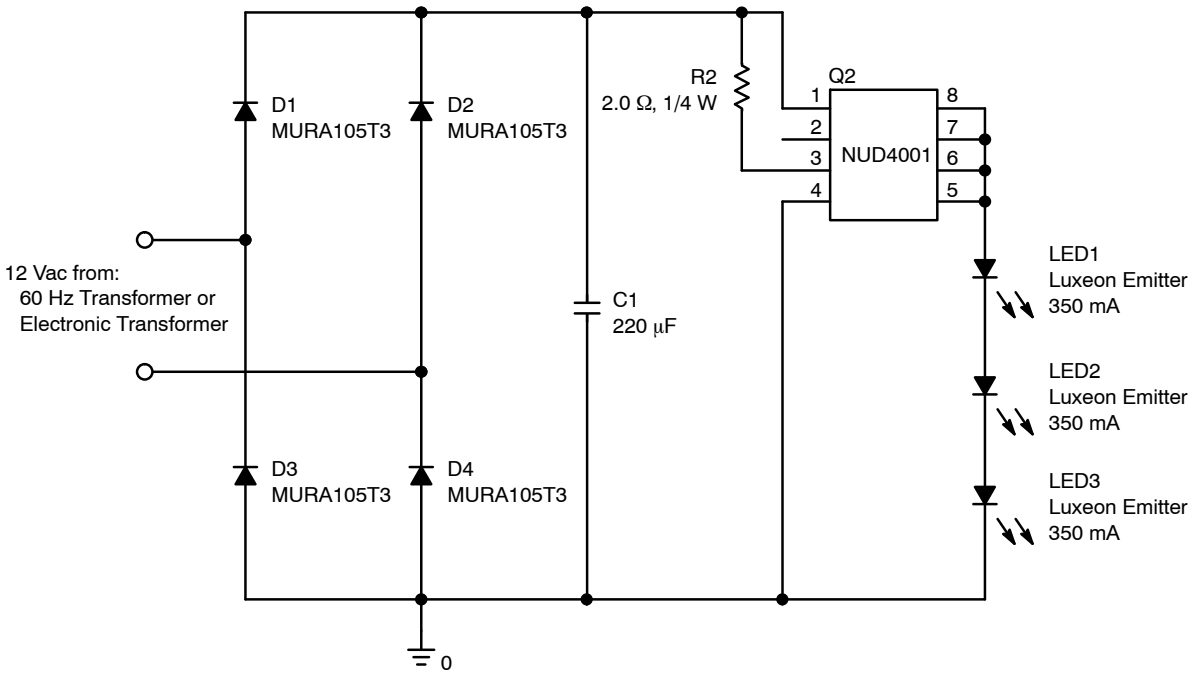

Figure 10. 12 Vac landscape lighting application circuit using the NUD4001 device to drive three 350 mA LEDs.

THERMAL INFORMATION

NUD4001, NSVD4001 Power Dissipation

The power dissipation of the SO−8 is a function of the pad size. This can vary from the minimum pad size for soldering to a pad size given for maximum power dissipation. Power dissipation for a surface mount device is determined by $T_{J(max)}$, the maximum rated junction temperature of the die, $R_{\theta JA}$, the thermal resistance from the device junction to ambient, and the operating temperature, T_A. Using the values provided on the data sheet for the SO−8 package, P_D can be calculated as follows:

$$P_D = \frac{T_{Jmax} - T_A}{R_{\theta JA}}$$

The values for the equation are found in the maximum ratings table on the data sheet. Substituting these values into the equation for an ambient temperature T_A of 25°C, one can calculate the power dissipation of the device which in this case is 1.13 W.

$$P_D = \frac{150^\circ C - 25^\circ C}{110^\circ C} = 1.13\ W$$

The 110°C/W for the SO−8 package assumes the use of a FR−4 copper board with an area of 2 square inches with 2 oz coverage to achieve a power dissipation of 1.13 W. There are other alternatives to achieving higher dissipation from the SOIC package. One of them is to increase the copper area to reduce the thermal resistance. Figure 11 shows how the thermal resistance changes for different copper areas. Another alternative would be to use a ceramic substrate or an aluminum core board such as Thermal Clad®. Using a board material such as Thermal Clad or an aluminum core board, the power dissipation can be even doubled using the same footprint.

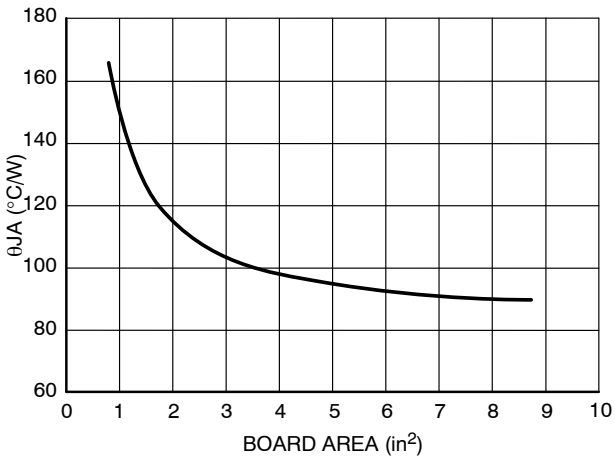

Figure 11. θJA versus Board Area

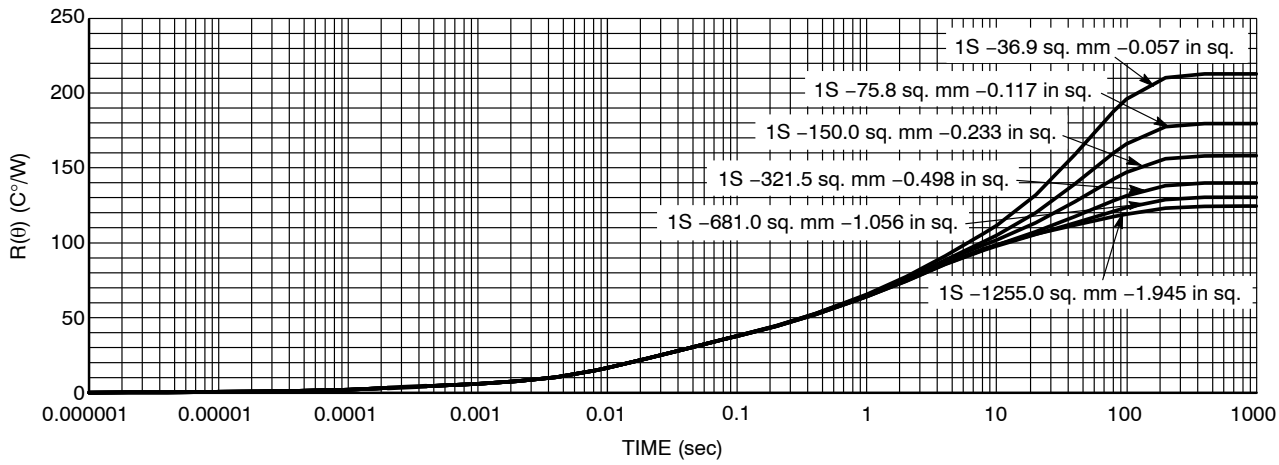

Figure 12. Transient Thermal Response

PACKAGE DIMENSIONS

SOIC−8 NB
CASE 751−07
ISSUE AK

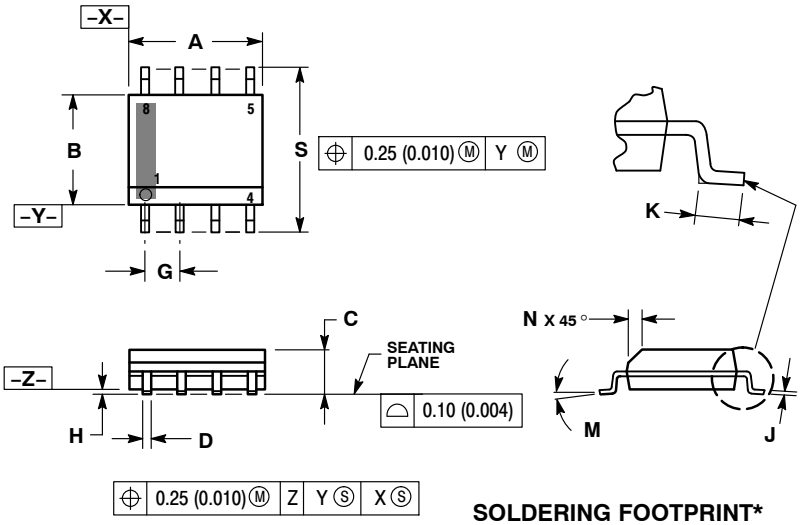

NOTES:
1. DIMENSIONING AND TOLERANCING PER ANSI Y14.5M, 1982.
2. CONTROLLING DIMENSION: MILLIMETER.
3. DIMENSION A AND B DO NOT INCLUDE MOLD PROTRUSION.
4. MAXIMUM MOLD PROTRUSION 0.15 (0.006) PER SIDE.
5. DIMENSION D DOES NOT INCLUDE DAMBAR PROTRUSION. ALLOWABLE DAMBAR PROTRUSION SHALL BE 0.127 (0.005) TOTAL IN EXCESS OF THE D DIMENSION AT MAXIMUM MATERIAL CONDITION.
6. 751−01 THRU 751−06 ARE OBSOLETE. NEW STANDARD IS 751−07.

	MILLIMETERS		INCHES	
DIM	MIN	MAX	MIN	MAX
A	4.80	5.00	0.189	0.197
B	3.80	4.00	0.150	0.157
C	1.35	1.75	0.053	0.069
D	0.33	0.51	0.013	0.020
G	1.27 BSC		0.050 BSC	
H	0.10	0.25	0.004	0.010
J	0.19	0.25	0.007	0.010
K	0.40	1.27	0.016	0.050
M	0 °	8 °	0 °	8 °
N	0.25	0.50	0.010	0.020
S	5.80	6.20	0.228	0.244

STYLE 25:
PIN 1. VIN
2. N/C
3. REXT
4. GND
5. IOUT
6. IOUT
7. IOUT
8. IOUT

SOLDERING FOOTPRINT*

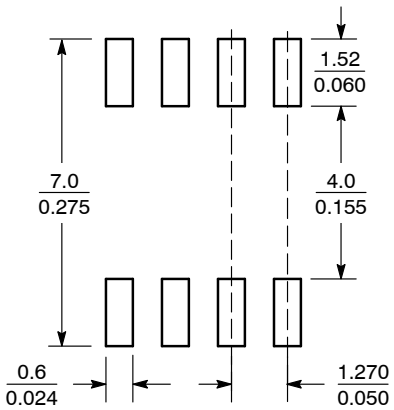

SCALE 6:1 (mm / inches)

*For additional information on our Pb−Free strategy and soldering details, please download the ON Semiconductor Soldering and Mounting Techniques Reference Manual, SOLDERRM/D.

Thermal Clad is a registered trademark of the Bergquist Company.

ON Semiconductor and ON are registered trademarks of Semiconductor Components Industries, LLC (SCILLC). SCILLC reserves the right to make changes without further notice to any products herein. SCILLC makes no warranty, representation or guarantee regarding the suitability of its products for any particular purpose, nor does SCILLC assume any liability arising out of the application or use of any product or circuit, and specifically disclaims any and all liability, including without limitation special, consequential or incidental damages. "Typical" parameters which may be provided in SCILLC data sheets and/or specifications can and do vary in different applications and actual performance may vary over time. All operating parameters, including "Typicals" must be validated for each customer application by customer's technical experts. SCILLC does not convey any license under its patent rights nor the rights of others. SCILLC products are not designed, intended, or authorized for use as components in systems intended for surgical implant into the body, or other applications intended to support or sustain life, or for any other application in which the failure of the SCILLC product could create a situation where personal injury or death may occur. Should Buyer purchase or use SCILLC products for any such unintended or unauthorized application, Buyer shall indemnify and hold SCILLC and its officers, employees, subsidiaries, affiliates, and distributors harmless against all claims, costs, damages, and expenses, and reasonable attorney fees arising out of, directly or indirectly, any claim of personal injury or death associated with such unintended or unauthorized use, even if such claim alleges that SCILLC was negligent regarding the design or manufacture of the part. SCILLC is an Equal Opportunity/Affirmative Action Employer. This literature is subject to all applicable copyright laws and is not for resale in any manner.

PUBLICATION ORDERING INFORMATION

LITERATURE FULFILLMENT:
Literature Distribution Center for ON Semiconductor
P.O. Box 5163, Denver, Colorado 80217 USA
Phone: 303−675−2175 or 800−344−3860 Toll Free USA/Canada
Fax: 303−675−2176 or 800−344−3867 Toll Free USA/Canada
Email: orderlit@onsemi.com

N. American Technical Support: 800−282−9855 Toll Free USA/Canada
Europe, Middle East and Africa Technical Support:
Phone: 421 33 790 2910
Japan Customer Focus Center
Phone: 81−3−5817−1050

ON Semiconductor Website: **www.onsemi.com**

Order Literature: http://www.onsemi.com/orderlit

For additional information, please contact your local Sales Representative