Excellent Integrated System Limited

Stocking Distributor

Click to view price, real time Inventory, Delivery & Lifecycle Information:

Molex Connector Corporation
0002065139

For any questions, you can email us directly:
sales@integrated-circuit.com

Distributor of Molex Connector Corporation: Excellent Integrated System Limited
Datasheet of 0002065139 - CONN FEMALE TERM 24-30AWG GOLD
Contact us: sales@integrated-circuit.com Website: www.integrated-circuit.com

1855

PART NO.	ENG. NO.	
02-06-1131	1855-(P901)	
02-06-1132	1855-(P901)L	
02-06-5137	**1855-(P591)**	**OBSOLETE**
02-06-5136	**1855-(P591)L**	**OBSOLETE**
02-06-5138	1855-(P561)	
02-06-5139	1855-(P561)L	
02-06-5130	1855-(P550)	
02-06-5135	1855-(P550)L	
02-06-5147	1855-(P228)	
02-06-5148	1855-(P228)L	
02-06-1141	1855-1(P901)	
NOT TOOLED	1855-1(P901)L	
02-06-1143	1855-(P901)1	

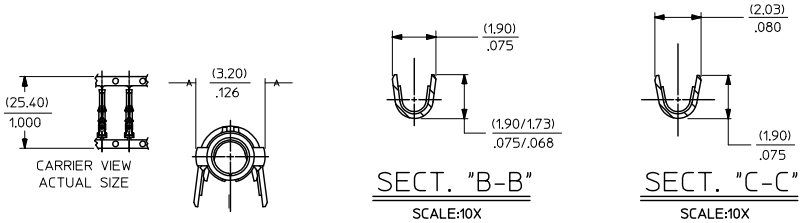

LEGEND

1855-*(****)*

- BLANK=WITH LOCKING TABS
- 1=WITHOUT LOCKING TABS
- P=PREPLATE
- BLANK=POSTPLATE
- FINISH CODE
- FORM
  - BLANK=CHAIN
  - 1=CHAIN WITH INTERLEAF PAPER ON REEL.
  - L=LOOSE

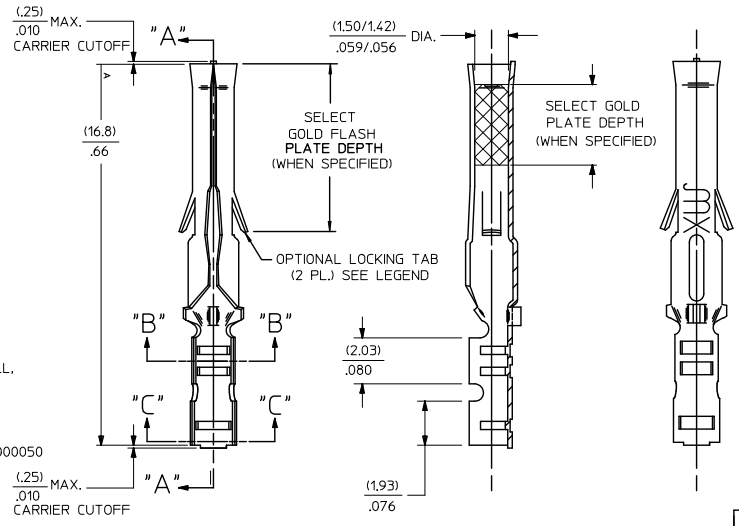

NOTES:

1. MATERIAL: BRASS
2. FINISHES:

901 HOT TIN DIP (.00051)/.000020 MIN.

* 228 SELECT GOLD PLATE (.00075/.000030 MIN. IN CONTACT AREA, SELECT TIN (.00250)/.000100 MIN. IN CRIMP AREA OVER (.00125)/.000050 MIN. NICKEL OVERALL, WITH .000010/(0.00025) MAX. SELECT GOLD FLASH IN AREA INDICATED.

561 SELECT GOLD PLATE (.00076)/.000030 MIN. IN CONTACT AREA, (.00127)/.000050 MIN. NICKEL OVERALL.

591 SELECT GOLD PLATE (.00127)/.000050 MIN. IN CONTACT AREA, OVER (.00127)/.000050 MIN. NICKEL OVERALL WITH (.00025)/.000010 MAX. GOLD FLASH OVERALL.

550 SELECT GOLD PLATE (.00038)/.000015 MIN. IN CONTACT AREA, OVER (.00076)/.000030 MIN. NICKLE OVERALL WITH (.00025)/.000010 MAX. GOLD FLASH OVERALL.

* THE PRIMARY SHIPPING CARTON WILL BE LABELED, "COMPLIANT TO RoHS DIRECTIVE 2002/95/EC AND ELV ANNEX II OF DIRECTIVE 2000/53/EC THIS LABEL MAY CONTAIN PRODUCT WITH TIN-LEAD.

3. PRODUCT SPECIFICATION: PS-02-0-6
4. PACKAGE INFORMATION: NOT AVAILABLE
5. TERMINAL FOR USE WITH (1.57)/.062 DIA. SERIES HOUSINGS AND WILL ACCEPT 24 THRU 30 AWG WIRE WITH (1.02/2.29)/.040/.090 INSULATION DIAMETER.

REV	DESCRIPTION
AP	REVSE Sn/Pb PLATE REDRAWN TO ME10 UCP2004-2007 5/07/04 RHOLTS
AN	OBSOLETE P/N UCR2002-0270 COMERCI 01/9/28
AM1	OBSOLETE -(P275) & -(P575)L ECR U6 0358 CSC 9/15/95 RW
AM	REV. AND REDRAWN PER ECR 10372 GEP 6-17-87 RW

REV. MATL SPEC/ASTAT TO ME10
EC NO: UCP2004-2007
DRWN:RHOLTS 2004/05/14
CH'KD: 2004/05/14
APPR:FSMITH 2004/05/18
AP

QUALITY SYMBOLS: ▼-0 ▽-0

GENERAL TOLERANCES (UNLESS SPECIFIED)

	mm	INCH
4 PLACES	± ---	± ---
3 PLACES	± ---	± .1
2 PLACES	± 0.25	± .014
1 PLACE	± 0.35	± ---
ANGULAR ±1/2°		

DRAFT WHERE APPLICABLE
MUST REMAIN WITHIN DIMENSIONS

SCALE 8:1 | DESIGN UNITS INCH | DIMENSION STYLE IN/MM | THIRD ANGLE PROJECTION | REVISE ON CAD ONLY

DRAWN BY GEP DATE 1987/09/17
CHECKED BY RW DATE 1987/09/17
APPROVED BY RAS DATE 1987/09/17

TITLE: CRIMP TERMINAL, FEMALE (1.57)/.062 DIA., BRASS FOR 24 THRU 30 GA. WIRE

MOLEX INCORPORATED

MATERIAL NO. SEE CHART | DOCUMENT NO. SD-1855-* | SHEET NO. 1 OF 1

THIS DRAWING CONTAINS INFORMATION THAT IS PROPRIETARY TO MOLEX INCORPORATED AND SHOULD NOT BE USED WITHOUT WRITTEN PERMISSION C

tb_frame_C_P_ME_T Rev. C 2002/05/05