Excellent Integrated System Limited

Stocking Distributor

Click to view price, real time Inventory, Delivery & Lifecycle Information:

Amphenol RF
172224

For any questions, you can email us directly:
sales@integrated-circuit.com

Distributor of Amphenol RF: Excellent Integrated System Limited
Datasheet of 172224 - CONN N JACK STR 50 OHM SOLDER
Contact us: sales@integrated-circuit.com Website: www.integrated-circuit.com

REV.	DATE	DESCRIPTION
A	02/27/00	REVISE O-RING GROOVE
B	04/22/00	ADD DUROMETER RATING TO GASKET
C	04/18/05	UPDATE DRAWING FORMAT

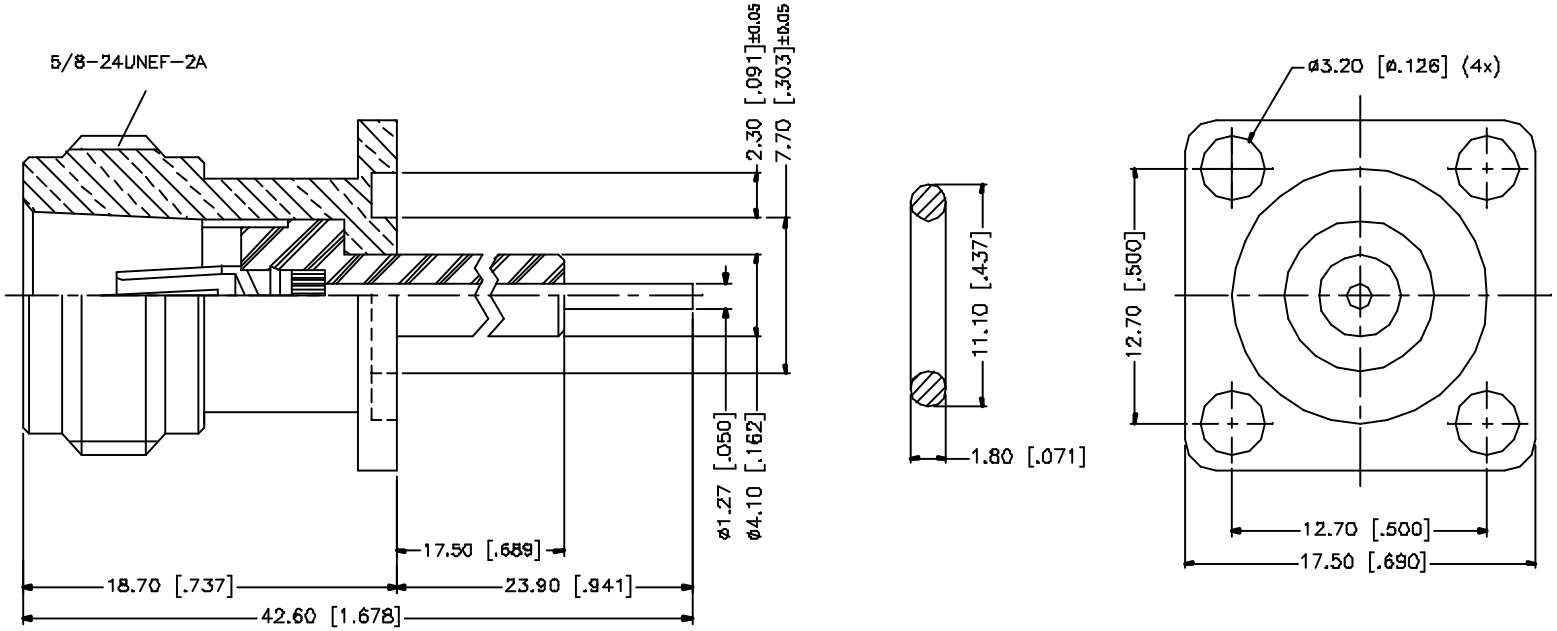

	DESCRIPTION	MATERIAL	FINISH	QTY
7				
6				
5				
4	GASKET	SILICONE 70A SHORE DUROMETER	RED	1
3	CONTACT PIN	PHOS. BRONZE	GOLD	1
2	INSULATOR	TEFLON	NATURAL	1
1	BODY	BRASS	NICKEL	1

UNLESS OTHERWISE SPECIFIED DIMENSIONS ARE IN MILLIMETERS. DIMENSIONS IN [ ] ARE IN INCHES AND FOR CUSTOMER REFERANCE ONLY.

UNLESS OTHERWISE SPECIFIED TOLERANCES FOR MILLIMETERS ARE:
0.5 – 8mm ± 0.20mm
8 – 30mm ± 0.40mm
30 – 120mm ± 0.50mm

UNLESS OTHERWISE SPECIFIED TOLERANCES FOR INCHES ARE:
.020 – .315 = ± 0.007"
.315 – 1.180 = ± 0.015"
1.180 – 4.724 = ± 0.020"

DO NOT SCALE DRAWING

APPROVALS		DATE
DRAWN	C.R.S.	04/18/05
CHECKED		
ISSUED		
SHEET	1 OF 1	
CAD FILE	C:/172/172224.DWG	

Amphenol Connex

PART DESCRIPTION: N PANEL RECEPTACLE EXTENDED TEFLON (.689/.941)

PART NO. 172224

DWG. NO.	REV.	SIZE	SCALE
172224.DWG	C	A	NA