Excellent Integrated System Limited

Stocking Distributor

Click to view price, real time Inventory, Delivery & Lifecycle Information:

E-Switch
TL3210AF160GQ

For any questions, you can email us directly:
sales@integrated-circuit.com

Distributor of E-Switch: Excellent Integrated System Limited
Datasheet of TL3210AF160GQ - SWITCH TACTILE SPST-NO 0.05A 12V
Contact us: sales@integrated-circuit.com Website: www.integrated-circuit.com

SHEET 1 OF 1

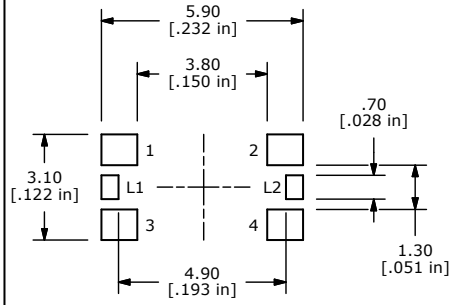

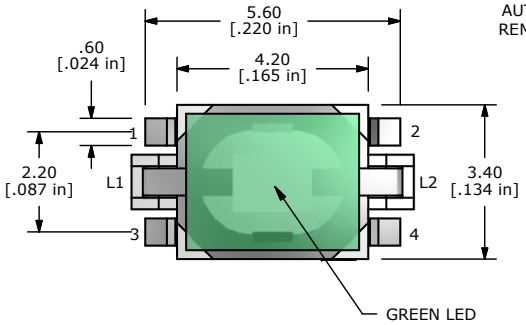

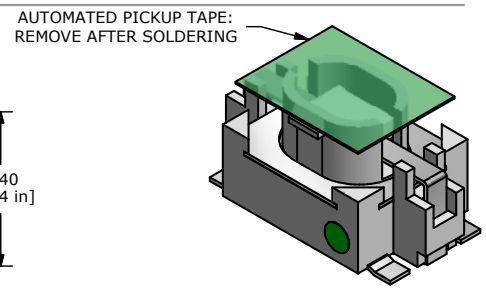

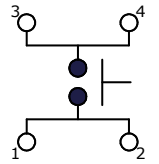

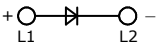

CIRCUIT: SPST

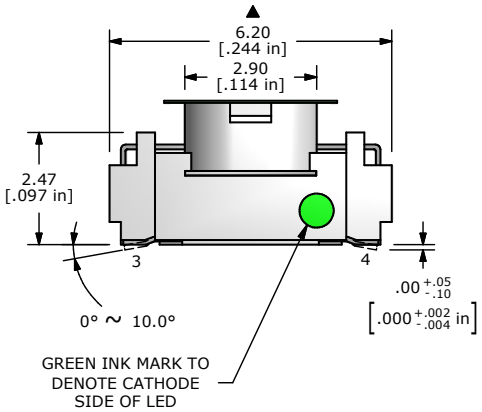

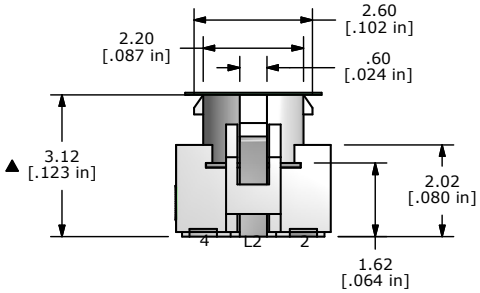

NOTES:
1. ALL DIMENSIONS IN MM [INCH]
2. GENERAL TOLERANCE: X.X=±0.4
   X.XX=±0.25
3. RATING: 12VDC, 50mA MAX.
4. CONTACT RESISTANCE: 500mΩ MAX.
5. INSULATION RESISTANCE: 100MΩ MIN. @ 100VDC
6. TRAVEL: 0.2±0.1 mm
7. ▲DIELECRIC STRENGTH: 250V AC FOR 1 MIN.
8. OPERATING FORCE: 160 ±50gf
9. OPERATING TEMPURATURE: -20˚C TO 70˚C
10. OPERATING LIFE: 100,000 CYCLES.
11. PACKAGING: TAPE & REEL, 2000 PIECES PER REEL (C)
12. ▲DENOTES CRITICAL PARAMETER
13. 2002/95/EC (ROHS) COMPLIANT

LED SPECS	UNITS	GREEN
FORWARD CURRENT	mA	20
FORWARD VOLTAGE	V	2.1 typ.- 2.5 max
LUMINOUS INTENSITY	mcd	50 typ.

REV	PCR NO	DESCRIPTION	DATE	BY
D	21166	ADD TAPE	7/1/13	EBP
C	21007	2000 PER REEL WAS 2500 PER REEL	2/6/13	EBP
B	20321	UPDATE TERMINAL CALL OUTS	12/05/11	BMA
A	20221	RELEASE FOR PRODUCTION	11/17/11	BMA

THE INFORMATION CONTAINED IN THIS DOCUMENT IS PROPRIETARY
TO E-SWITCH AND IS NOT TO BE COPIED OR TRANSFERRED

E-SWITCH

TITLE TL3210AF160GQ

SCALE	DATE	DR	DWG	REV
8:1	10/28/2011	BGL	B200302	D