# Excellent Integrated System Limited

Stocking Distributor

Click to view price, real time Inventory, Delivery & Lifecycle Information:

Harting
09458000000

For any questions, you can email us directly:
sales@integrated-circuit.com

Alle Rechte vorbehalten/ *All rights reserved*

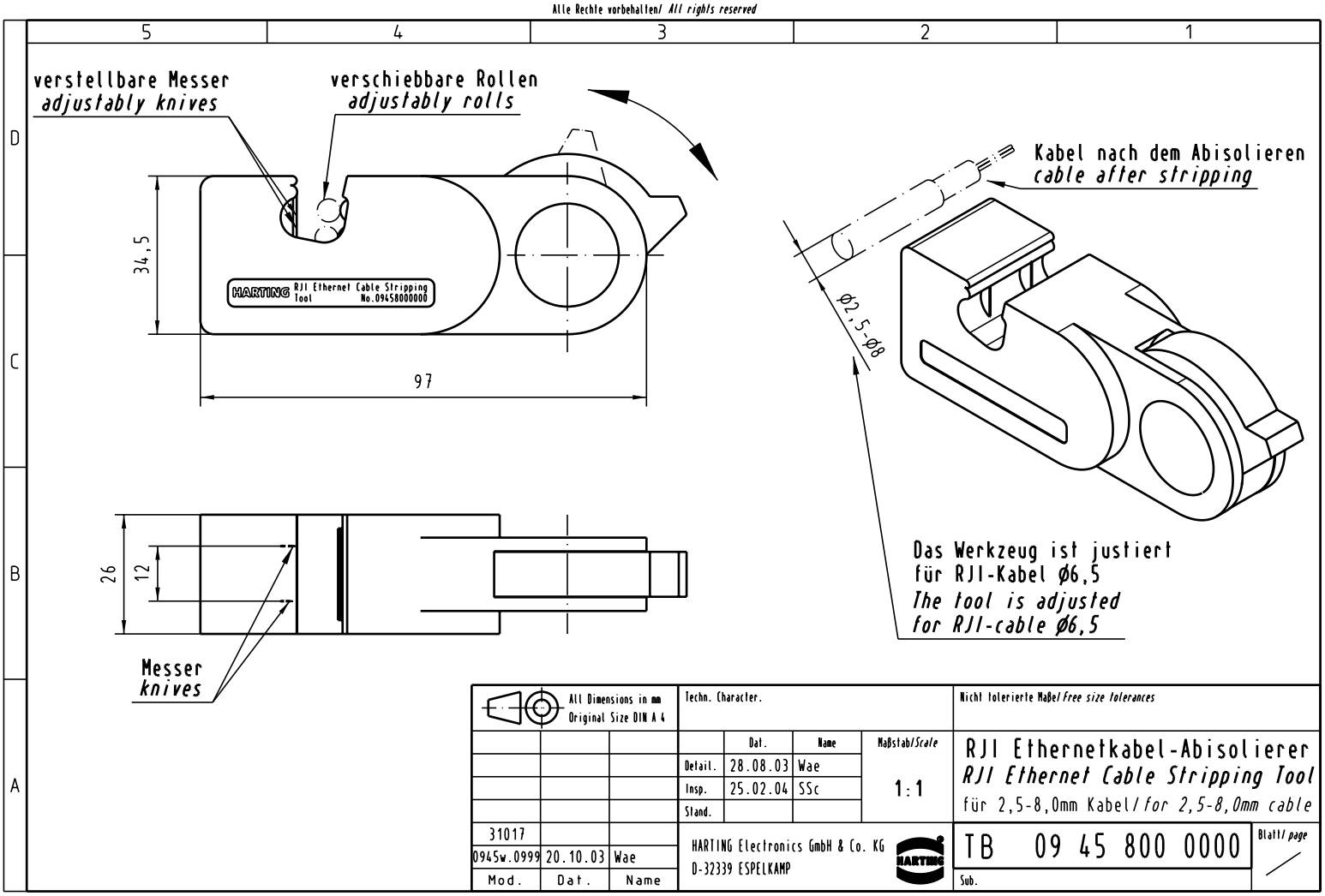


| | | | | | | |
|---|---|---|---|---|---|---|
| All Dimensions in mm Original Size DIN A 4 | | | Techn. Character. | | | Nicht tolerierte Maße/*Free size tolerances* |
| | | | | Dat. | Name | Maßstab/*Scale* |
| | | | Detail. | 28.08.03 | Wae | 1:1 |
| | | | Insp. | 25.02.04 | SSc | |
| | | | Stand. | | | |
| 31017 | | | HARTING Electronics GmbH & Co. KG D-32339 ESPELKAMP | | | RJI Ethernetkabel-Abisolierer *RJI Ethernet Cable Stripping Tool* für 2,5-8,0mm Kabel/*for 2,5-8,0mm cable* |
| 0945w.0999 | 20.10.03 | Wae | | | | TB 09 45 800 0000 |
| Mod. | Dat. | Name | | | | Sub. |

Blatt/*page* /