Excellent Integrated System Limited

Stocking Distributor

Click to view price, real time Inventory, Delivery & Lifecycle Information:

Molex Connector Corporation
0190720041

For any questions, you can email us directly:
sales@integrated-circuit.com

Distributor of Molex Connector Corporation: Excellent Integrated System Limited
Datasheet of 0190720041 - RING VIBRAKRIMP (AA-433-10)

FILE NO.	AA-CD-401-02

NOTES:

① MAT'L: COPPER
PLATING: ELECTRO TIN (.0003 MIN)
② TIN-PLATED BRASS FUNNEL FERRULE

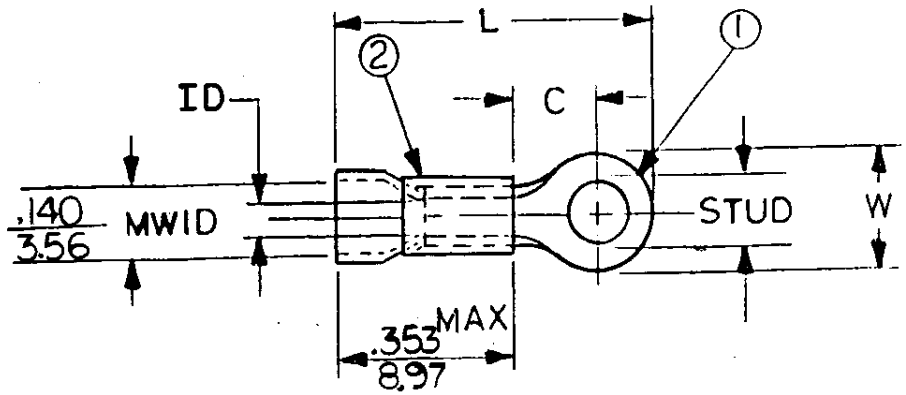

STUD SIZES: (±.005)

02 = .094
04 = .119
06 = .146
08 = .173
10 = .198
14 = .265
56 = .328
38 = .390

"UL" LISTING #E32244
"CSA" LISTING #18689

WIRE SIZE: 22-18 AWG
.25-1.5 MM²

ALL DIMENSIONS = INCHES / MM

(MWID) DENOTES MAXIMUM WIRE INSULATION DIAMETER

PART NUMBER	"W" ±.010	"C" MIN.	"L" MAX.	"ID" MIN.			AVAILABLE STUD SIZES	STOCK THICKNESS	
AA-433	.273 / 6.93	.240 / 6.10	.764 / 19.41	.062 / 1.57			04, 06, 08, 10	.028 +.001 -.000 / .71	
AA-4111	.187 / 4.75	.173 / 4.39	.663 / 16.84	.054 / 1.37			02, 04	.031 ±.001 / .79	

DIMENSIONAL TOLERANCES UNLESS OTHERWISE SPECIFIED			REFERENCE	SCALE: NTS	DATE	TITLE:
FRAC.	DEC	ANG.		DRWN. BY: JJ	11-26-84	RING TONGUE TERMINAL VIBRAKRIMP 400-SERIES
±	±	±		CHKD. BY: GZ	11-30-84	
				APPRD. BY:		

ETC molex INCORPORATED

DWG. NO. A CUSTOMER DWG