Excellent Integrated System Limited

Stocking Distributor

Click to view price, real time Inventory, Delivery & Lifecycle Information:

Molex Connector Corporation
0522070960

For any questions, you can email us directly:
sales@integrated-circuit.com

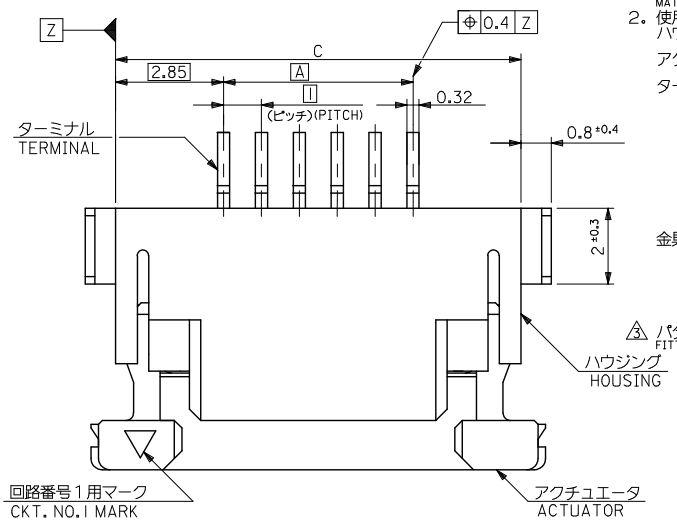

注記 NOTES

1. 接点部までの嵌合長さ。
MATING LENGTH TO CONTACT POINT.

2. 使用材料 MATERIAL
ハウジング　：46ナイロン（耐熱性），UL94V−0
HOUSING : HEAT-RESISTANT NYLON46, UL94V-0
アクチュエータ：PPS，UL94V−0
ACTUATOR : PPS, UL94V-0
ターミナル　：リン青銅（t＝0．32）
メッキ
コンタクト部：金メッキ 0.1マイクロメートル以上
テール部　：錫メッキ 1.0マイクロメートル以上
下地メッキ　：ニッケル 1.0マイクロメートル以上
TERMINAL : PHOS-BRO.(t=0.32)
PLATED
CONTACT AREA : GOLD PLATED 0.1MICROMETER MIN.
TAIL AREA : TIN PLATED 1.0MICROMETER MIN.
OVER PLATED : NICKEL PLATED 1.0MICROMETER MIN.
金具　：銅合金（t＝0．25）
メッキ　：錫メッキ 1マイクロメートル以上
下地メッキ：ニッケル 1マイクロメートル以上
FITTING NAIL : PHOS-BRO.(t=0.25)
PLATED : TIN PLATED 1MICROMETER MIN.
OVER PLATED : NICKEL PLATED 1MICROMETER MIN.

3. パターンはくり止め用金具
FITTING NAIL FOR PREVENTION OF FOOT PRINT PEELING.

4. エンボステープ梱包時は，アクチュエータがロックした状態とする。
ACTUATOR TO BE LOKCED IN EMBOSSED TAPE PACKAGE.

5. FPC挿入深さ
INSERTION DEPTH OF FPC.

6. パターン書き込み禁止エリア。
NO FOOT PRINT AREA.

7. テール及び金具の平坦度は，0.15 以下とする．
COPLANARITY OUT OF SPECIFICATION.
TAIL : 0.15 MAX.
NAIL : 0.15 MAX.

8. 本製品は 52207-**19 の鉛フリー品である．
THIS PRODUCT IS GOLD PLATING OF 52207-**19.

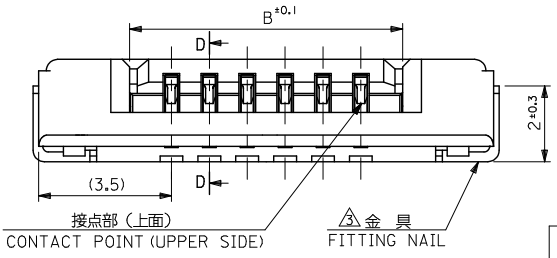

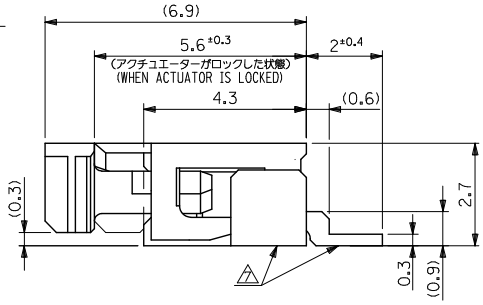

34.7	31.2	29	52207-3067	30
33.7	30.2	28	52207-2967	29
32.7	29.2	27	52207-2867	28
31.7	28.2	26	52207-2767	27
30.7	27.2	25	52207-2667	26
29.7	26.2	24	52207-2567	25
28.7	25.2	23	52207-2467	24
27.7	24.2	22	52207-2367	23
26.7	23.2	21	52207-2267	22
25.7	22.2	20	52207-2167	21
24.7	21.2	19	52207-2067	20
23.7	20.2	18	52207-1967	19
22.7	19.2	17	52207-1867	18
21.7	18.2	16	52207-1767	17
20.7	17.2	15	52207-1667	16
19.7	16.2	14	52207-1567	15
18.7	15.2	13	52207-1467	14
17.7	14.2	12	52207-1367	13
16.7	13.2	11	52207-1267	12
15.7	12.2	10	52207-1167	11
14.7	11.2	9	52207-1067	10
13.7	10.2	8	52207-0967	9
12.7	9.2	7	52207-0867	8
11.7	8.2	6	52207-0767	7
10.7	7.2	5	52207-0667	6
9.7	6.2	4	52207-0567	5
8.7	5.2	3	52207-0467	4
7.7	4.2	2	52207-0367	3
C	B	A	MATERIAL NO. / MODEL NO. 52207-**67	極数 CIRCUITS

REV	DESCRIPTION	
7	REVISED EC NO: J2007-0873 DRWN:YOTANI CHKD:Y. MAEDA APPR:NUKITA	2006/09/22 2007/03/23 2007/03/26

GENERAL TOLERANCES (UNLESS SPECIFIED)
10 UNDER ±0.2
10 OVER 30 UNDER ±0.25
30 OVER ±0.3
ANGULAR ±1 °
DRAFT WHERE APPLICABLE MUST REMAIN WITHIN DIMENSIONS

DIMENSION STYLE: MM ONLY
SCALE: 10:1
DESIGN UNITS: METRIC
THIRD ANGLE PROJECTION

DRAWN BY: M.UMEDA DATE: 2005/03/02
CHECKED BY: K.TOYODA DATE: 2005/03/02
APPROVED BY: N.UKITA DATE: 2005/03/02

TITLE: 1.0 FPC CONN. ZIF SMT HSG ASSY -LEAD FREE-

molex MOLEX INCORPORATED

MATERIAL NO.: SEE CHART
DOCUMENT NO.: SD-52207-064
SHEET NO.: 1 OF 2
SIZE: A3

THIS DRAWING CONTAINS INFORMATION THAT IS PROPRIETARY TO MOLEX INCORPORATED AND SHOULD NOT BE USED WITHOUT WRITTEN PERMISSION

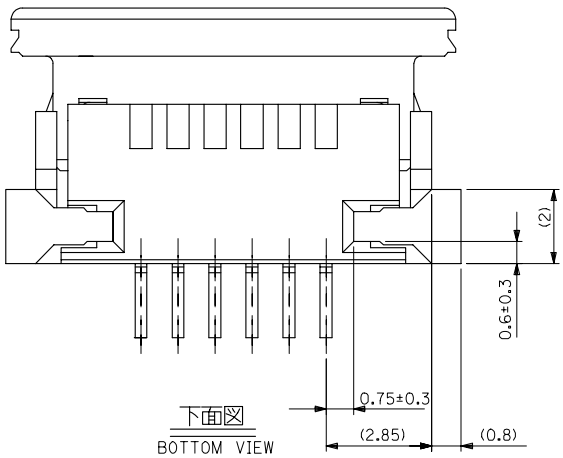

下面図
BOTTOM VIEW

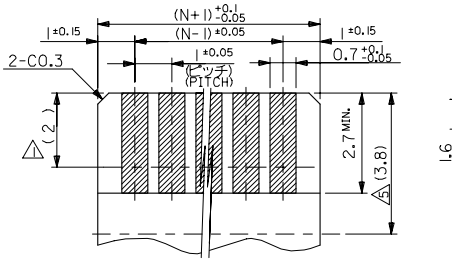

(仕上り厚さ：0．3 ±0.05)（メッキ厚：0.1 μm MIN.）
(THICKNESS：0．3 ±0.05)（PLATING THICKNESS：0.1 μm MIN.）
適合ＦＰＣ／ＦＦＣ推奨寸法
RECOMMENDED APPLICABLE FPC/FFC LAYOUT

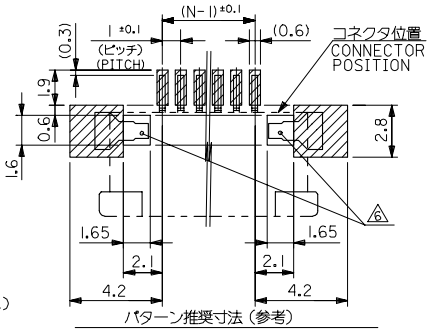

パターン推奨寸法（参考）
RECOMMENDED PATTERN DIM.(REF.)

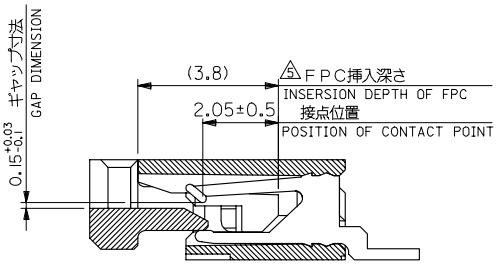

断面Ｄ－Ｄ
SECT.D-D

FPCについて：
打抜き方向は、導体側から補強板側を推奨いたします．
補強フィルム材質は、ポリイミドを推奨いたします．
接着剤は、熱硬貨接着剤を推奨いたします．

ABOUT FPC：
RECOMMENDED PUNCHER DIRECTION : FROM CONDUCTOR SIDE TO STIFFENER BOAD SIDE.
RECOMMENDED MATERIAL :
STIFFENER FILM : POLYIMIDE
BONDING AGENT : TERMOSETTING BONDING AGENT

REV	DESCRIPTION	DATE	DRAWN	CHK'D	APPR
T	REVISED EC NO: J2007-0873	2006/09/22	M.YOTANI	Y.MAEDA	M.NUKITA

GENERAL TOLERANCES (UNLESS SPECIFIED)
10 UNDER ±0.2
10 OVER 30 UNDER ±0.25
30 OVER ±0.3
ANGULAR ±1 °
DRAFT WHERE APPLICABLE MUST REMAIN WITHIN DIMENSIONS

DIMENSION STYLE: MM ONLY	SCALE: 10:1	DESIGN UNITS: METRIC	THIRD ANGLE PROJECTION
DRAWN BY: M.UMEDA	DATE: 2005/03/02	TITLE: 1.0 FPC CONN. ZIF SMT HSG ASSY -LEAD FREE-	
CHECKED BY: K.TOYODA	DATE: 2005/03/02		
APPROVED BY: N.UKITA	DATE: 2005/03/02	MOLEX INCORPORATED	
MATERIAL NO.: SEE SHEET 1		DOCUMENT NO.: SD-52207-064	SHEET NO.: 2 OF 2
SIZE: A3	THIS DRAWING CONTAINS INFORMATION THAT IS PROPRIETARY TO MOLEX INCORPORATED AND SHOULD NOT BE USED WITHOUT WRITTEN PERMISSION		

tb_frame_A3_J_ME_S Rev. D 2004/04/02 EN-02JA(021)

Distributor of Molex Connector Corporation: Excellent Integrated System Limited
Datasheet of 0522070960 - CONN FFC FPC TOP 9POS 1.00MM R/A
Contact us: sales@integrated-circuit.com Website: www.integrated-circuit.com

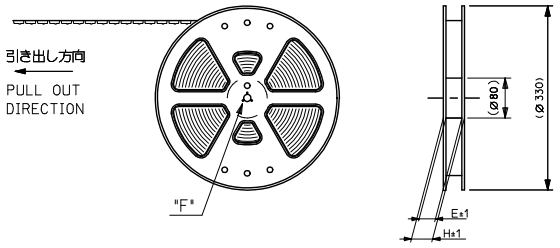

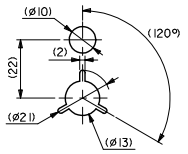

DETAIL "F"

注記

1. 製品番号 52207-**67 の梱包状態はアクチュエータがロックした状態とする。
詳細寸法については図面 SD-52207-064 を参照下さい。
IN THE PACKAGE , ACTUATOR OF PART NO. 52207-**67 SHOULD BE LOCKED
RE DETAILED DIMENSIONS , SEE SD-52207-064
2. 梱包数量：１０００個／リール
NUMBER OF CONNECTORS : 1000PCS/REEL
3. リードテープ長さ(LEAD TAPE LENGTH)

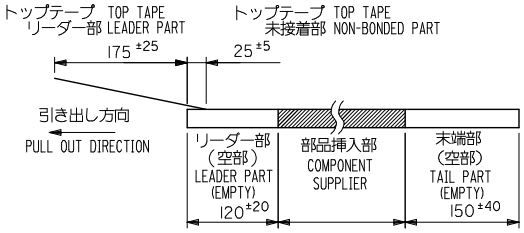

4. トップテープの剥離強度： 0.1~1.3N (10gf~130gf)（剥離方向は下図参照）
尚、本規格値は、出荷時に適用。(但し、輸送時に剥離が発生しない事。)
PEELING OFF FORCE OF TOP TAPE : 0.1~1.3N (10gf~130gf)
(PEELING DIRECTION AS SHOWN IN FOLLOWING FIG.)
THIS REQUIREMENT SHOULD BE APPLIED AT SHIPMENT. (PEEL OFF SHOULD NOT BE ALLOWED , DURING TRANSPORTATION.)

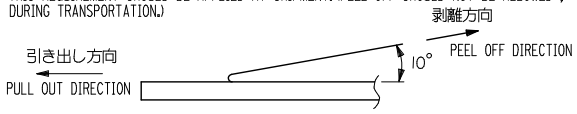

5. 材料 (MATERIAL)
キャリアテープ (CARRIER TAPE) : ポリプロピレン (POLYPROPYLENE)
トップテープ (TOPTAPE) : PET, PE, PEF
リール (REEL): ポリスチレン (PS) <リサイクル材を含む>
POLYSTYRENE(PS) <RECYCLE MATERIAL CONTAINED>
6. 本製品は 52207-**85 の金メッキ品である。
THIS PRODUCT IS GOLD PLATING OF 52207-**85.
7. 本製品は乾燥剤入り、ハイバリア梱包仕様である。
THIS PRODUCT IS HIGH BARRIER PACKAGE WITH DESICCANT.

MODEL No.52207-**60

REVISED			
EC NO: J2016-0832	DRWN: YMIZUNO02	CHKD: KTAKAHASHI	APPR: TKUSUHARA01
2016/02/03	2016/02/03	2016/02/03	2016/02/12
REV: H	DESCRIPTION		

GENERAL TOLERANCES (UNLESS SPECIFIED)			
0.25	UNDER	UNDER	±0.03
0.25	OVER 0.5	UNDER	±0.05
0.5	OVER 1.0	UNDER	±0.1
1.0	OVER 10	UNDER	±0.2
10	OVER 30	UNDER	±0.25
30	OVER		±0.3
ANGULAR ±1 °			

DRAFT WHERE APPLICABLE MUST REMAIN WITHIN DIMENSIONS

DIMENSION STYLE	SCALE	DESIGN UNITS	
MM ONLY	---	METRIC	THIRD ANGLE PROJECTION

DRAWN BY	DATE	TITLE
M.UMEDA	2005/03/03	1.0 FPC CONN. ZIF SMT WITH EMBSTP PKG -LEAD FREE-
CHECKED BY	DATE	
K.TOYODA	2005/03/03	
APPROVED BY	DATE	molex
N.UKITA	2005/03/03	

MATERIAL NO.	DOCUMENT NO.	SHEET NO.
SEE SHEET 2-5	SD-52207-065	1 OF 5

SIZE A3

THIS DRAWING CONTAINS INFORMATION THAT IS PROPRIETARY TO MOLEX ELECTRONIC TECHNOLOGIES, LLC AND SHOULD NOT BE USED WITHOUT WRITTEN PERMISSION

tb_frame_A3_J_ME_S
Rev J 2015/09/01

Distributor of Molex Connector Corporation: Excellent Integrated System Limited
Datasheet of 0522070960 - CONN FFC FPC TOP 9POS 1.00MM R/A
Contact us: sales@integrated-circuit.com Website: www.integrated-circuit.com

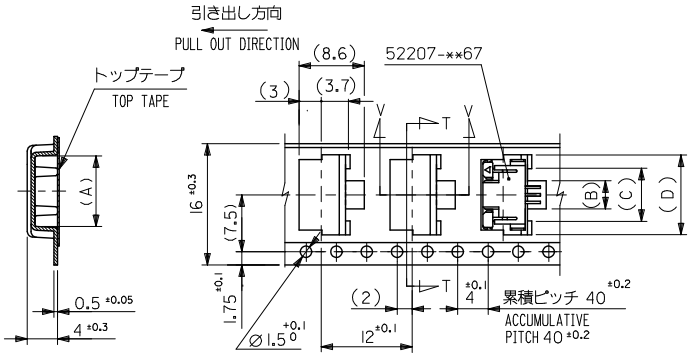

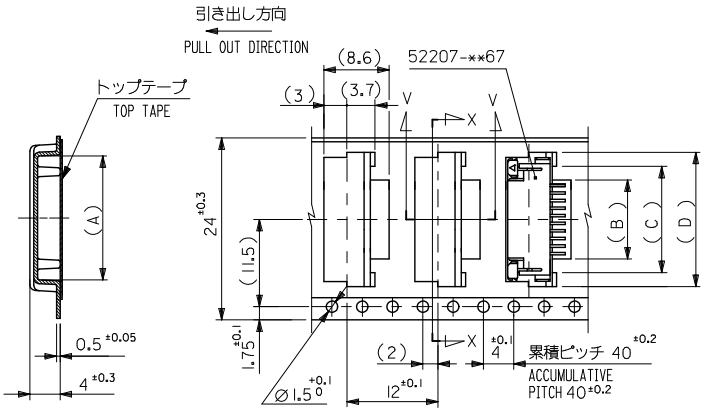

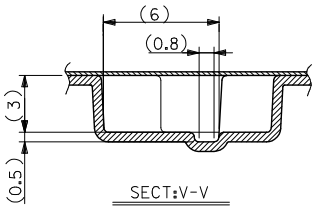

キャリアテープ幅 CARRIER TAPE WIDTH	H	E	(D)	(C)	(B)	(A)	EMBOSSED PACKAGE ORDER NO.	極数 CKT.
24	29.4	25.4	18.5	15	11.7	17.3	52207-1160	11
			17.5	14	10.7	16.3	52207-1060	10
			16.5	13	9.7	15.3	52207-0960	9
			15.5	12	8.7	14.3	52207-0860	8
			14.5	11	7.7	13.3	52207-0760	7
			13.5	10	6.7	12.3	52207-0660	6
			12.5	9	5.7	11.3	52207-0560	5
			11.5	8	4.7	10.3	52207-0460	4
16	21.4	17.4	10.5	7	3.7	9.3	52207-0360	3

SEE SHEET 1
EC NO: J2016-0832
DRWN:YMIZUNO02 2016/02/03
CHKD:KTAKAHASHI 2016/02/03
APPR:TKUSUHARA01 2016/02/12

REV	DESCRIPTION
H	

GENERAL TOLERANCES (UNLESS SPECIFIED)

0.25	UNDER		UNDER	±0.03
0.25	OVER	0.5	UNDER	±0.05
0.5	OVER	1.0	UNDER	±0.1
1.0	OVER	10	UNDER	±0.2
10	OVER	30	UNDER	±0.25
30	OVER			±0.3
ANGULAR		±1 °		

DRAFT WHERE APPLICABLE MUST REMAIN WITHIN DIMENSIONS

DIMENSION STYLE: MM ONLY
SCALE: ---
DESIGN UNITS: METRIC
THIRD ANGLE PROJECTION

DRAWN BY: M.UMEDA DATE: 2005/03/03
CHECKED BY: K.TOYODA DATE: 2005/03/03
APPROVED BY: N.UKITA DATE: 2005/03/03

TITLE: 1.0 FPC CONN. ZIF SMT WITH EMBSTP PKG -LEAD FREE-

molex

MATERIAL NO.: SEE CHART
DOCUMENT NO.: SD-52207-065
SHEET NO.: 2 OF 5
SIZE: A3

THIS DRAWING CONTAINS INFORMATION THAT IS PROPRIETARY TO MOLEX ELECTRONIC TECHNOLOGIES, LLC AND SHOULD NOT BE USED WITHOUT WRITTEN PERMISSION

tb_frame_A3_J_ME_S
Rev J 2015/09/01

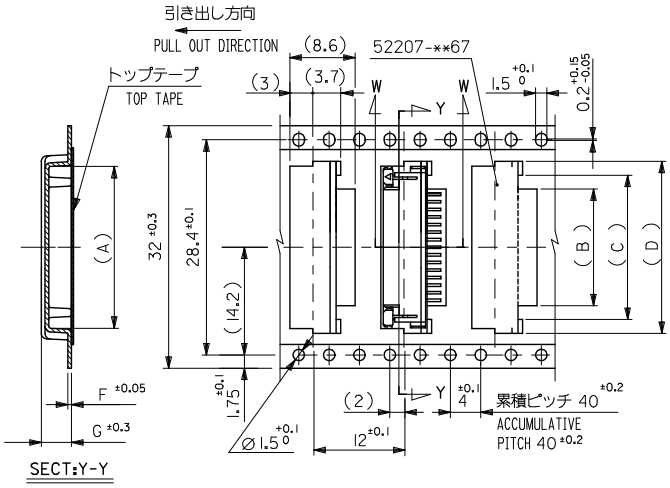

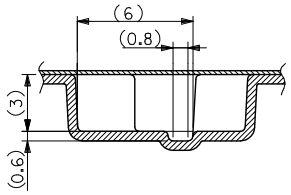

キャリアテープ幅 CARRIER TAPE WIDTH	H	E	(G)	(F)	(D)	(C)	(B)	(A)	EMBOSSED PACKAGE ORDER NO.	極数 CKT.
32	37.4	33.4	4.0	0.5	23.5	20	16.7	22.35	52207-1660	16
			4.2	0.6	22.5	19	15.7	21.35	52207-1560	15
			4.2	0.6	21.5	18	14.7	20.35	52207-1460	14
			4.2	0.6	20.5	17	13.7	19.35	52207-1360	13
			4.2	0.6	19.5	16	12.7	18.35	52207-1260	12

SEE SHEET 1
EC NO: J2016-0832
DRWN:YMIZUNO02 2016/02/03
CHKD:KTAKAHASHI 2016/02/03
APPR:TKUSUHARA01 2016/02/12

REV	DESCRIPTION
H	

GENERAL TOLERANCES (UNLESS SPECIFIED)

0.25	UNDER	UNDER	±0.03
0.25	OVER 0.5	UNDER	±0.05
0.5	OVER 1.0	UNDER	±0.1
1.0	OVER 10	UNDER	±0.2
10	OVER 30	UNDER	±0.25
30	OVER		±0.3
ANGULAR	±1 °		

DRAFT WHERE APPLICABLE MUST REMAIN WITHIN DIMENSIONS

DIMENSION STYLE: MM ONLY
SCALE: ---
DESIGN UNITS: METRIC
THIRD ANGLE PROJECTION

DRAWN BY: M.UMEDA DATE: 2005/03/03
CHECKED BY: K.TOYODA DATE: 2005/03/03
APPROVED BY: N.UKITA DATE: 2005/03/03

TITLE: 1.0 FPC CONN ZIF SMT WITH EMBSTP PKG -LEAD FREE-

molex

MATERIAL NO.: SEE CHART
DOCUMENT NO.: SD-52207-065
SHEET NO.: 3 OF 5
SIZE: A3

THIS DRAWING CONTAINS INFORMATION THAT IS PROPRIETARY TO MOLEX ELECTRONIC TECHNOLOGIES, LLC AND SHOULD NOT BE USED WITHOUT WRITTEN PERMISSION

tb_frame_A3_J_ME_S
Rev J 2015/09/01

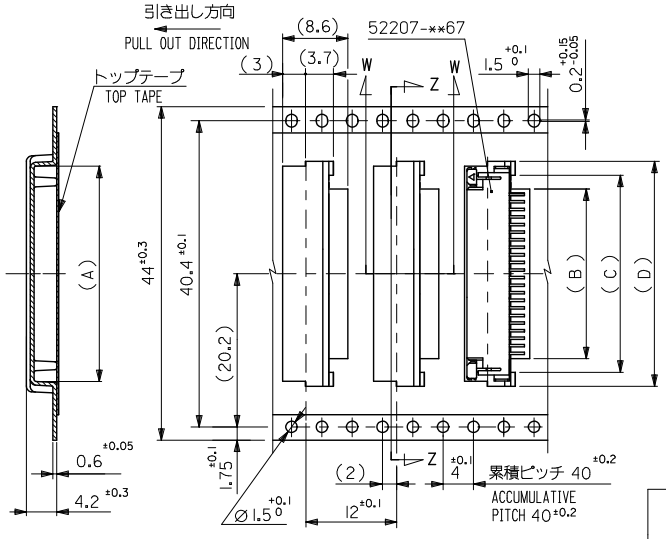

キャリアテープ幅 CARRIER TAPE WIDTH	H	E	(G)	(F)	(D)	(C)	(B)	(A)	EMBOSSED PACKAGE ORDER NO.	極数 CKT.
44	49.4	45.4	—	—	34.5	31	27.7	33.35	52207-2760	27
			—	—	33.5	30	26.7	32.35	52207-2660	26
			—	—	32.5	29	25.7	31.35	52207-2560	25
			—	—	31.5	28	24.7	30.35	52207-2460	24
			—	—	30.5	27	23.7	29.35	52207-2360	23
			—	—	29.5	26	22.7	28.35	52207-2260	22
			—	—	28.5	25	21.7	27.35	52207-2160	21
			—	—	27.5	24	20.7	26.35	52207-2060	20
			—	—	26.5	23	19.7	25.35	52207-1960	19
			—	—	25.5	22	18.7	24.35	52207-1860	18
			—	—	24.5	21	17.7	23.35	52207-1760	17

SEE SHEET 1
EC NO: J2016-0832 2016/02/03
DRWN:YMIZUNO02 2016/02/03
CHKD:KTAKAHASHI 2016/02/03
APPR:TKUSUHARA01 2016/02/12
REV H
DESCRIPTION

GENERAL TOLERANCES (UNLESS SPECIFIED)

0.25	UNDER		±0.03
0.25	OVER	0.5	±0.05
0.5	OVER	1.0	±0.1
1.0	OVER	10	±0.2
10	OVER	30	±0.25
30	OVER		±0.3
ANGULAR	±1 °		

DRAFT WHERE APPLICABLE MUST REMAIN WITHIN DIMENSIONS

DIMENSION STYLE: MM ONLY
SCALE: ---
DESIGN UNITS: METRIC
THIRD ANGLE PROJECTION

DRAWN BY: M.UMEDA DATE: 2005/03/03
CHECKED BY: K.TOYODA DATE: 2005/03/03
APPROVED BY: N.UKITA DATE: 2005/03/03

TITLE: 1.0 FPC CONN ZIF SMT WITH EMBSTP PKG -LEAD FREE-

molex

MATERIAL NO.: SEE CHART
DOCUMENT NO.: SD-52207-065
SHEET NO.: 4 OF 5
SIZE: A3

THIS DRAWING CONTAINS INFORMATION THAT IS PROPRIETARY TO MOLEX ELECTRONIC TECHNOLOGIES, LLC AND SHOULD NOT BE USED WITHOUT WRITTEN PERMISSION

tb_frame_A3_J_ME_S
Rev J 2015/09/01

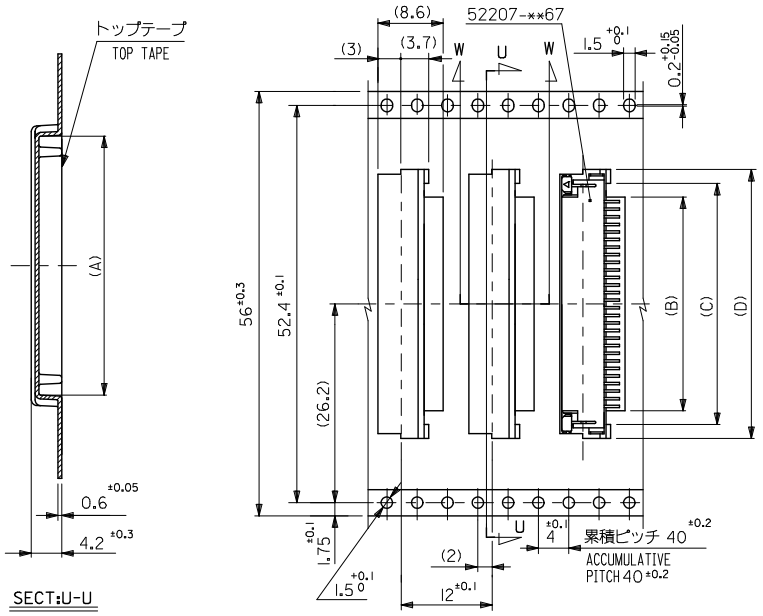

56mm 幅 キャリアテープ
56mm WIDTH CARRIER TAPE

キャリアテープ幅 CARRIER TAPE WIDTH	H	E	(D)	(C)	(B)	(A)	EMBOSSED PACKAGE ORDER NO.	極数 CKT.
56	61.4	57.4	37.5	34	30.7	36.35	52207-3060	30
			36.5	33	29.7	35.35	52207-2960	29
			35.5	32	28.7	34.35	52207-2860	28

SEE SHEET 1
EC NO: J2016-0832
DRWN:YMIZUNO02 2016/02/03
CHKD:KTAKAHASHI 2016/02/03
APPR:TKUSUHARA01 2016/02/12

REV	DESCRIPTION
H	

GENERAL TOLERANCES (UNLESS SPECIFIED)

0.25	UNDER		UNDER	±0.03
0.25	OVER	0.5	UNDER	±0.05
0.5	OVER	1.0	UNDER	±0.1
1.0	OVER	10	UNDER	±0.2
10	OVER	30	UNDER	±0.25
30	OVER			±0.3
ANGULAR		±1 °		

DRAFT WHERE APPLICABLE MUST REMAIN WITHIN DIMENSIONS

DIMENSION STYLE: MM ONLY
SCALE: ---
DESIGN UNITS: METRIC
THIRD ANGLE PROJECTION

DRAWN BY: M.UMEDA DATE: 2005/03/03
CHECKED BY: K.TOYODA DATE: 2005/03/03
APPROVED BY: N.UKITA DATE: 2005/03/03

TITLE: 1.0 FPC CONN ZIF SMT WITH EMBSTP PKG -LEAD FREE-

molex

MATERIAL NO.: SEE CHART
DOCUMENT NO.: SD-52207-065
SHEET NO.: 5 OF 5
SIZE: A3

THIS DRAWING CONTAINS INFORMATION THAT IS PROPRIETARY TO MOLEX ELECTRONIC TECHNOLOGIES, LLC AND SHOULD NOT BE USED WITHOUT WRITTEN PERMISSION

tb_frame_A3_J_ME_S
Rev J 2015/09/01