# Excellent Integrated System Limited

Stocking Distributor

Click to view price, real time Inventory, Delivery & Lifecycle Information:

Molex Connector Corporation
0878980557

For any questions, you can email us directly:
sales@integrated-circuit.com

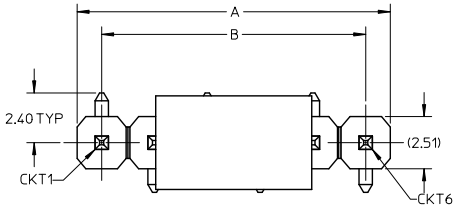


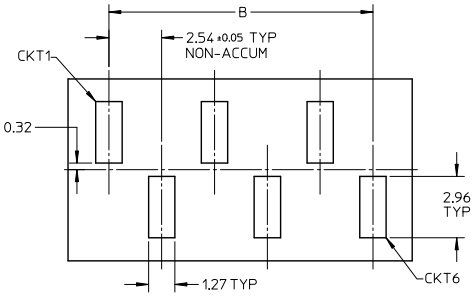


RECOMMENDED PCB LAYOUT: COMPONENT SIDE

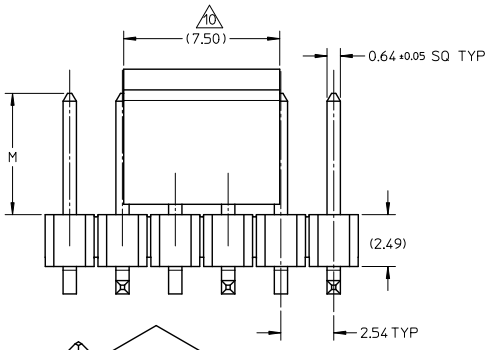


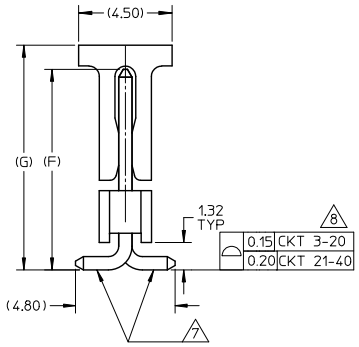


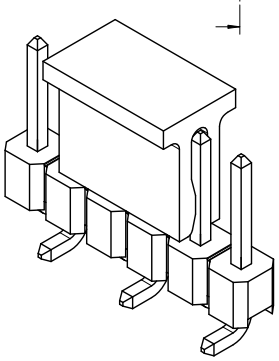

NOTES:
1. MATERIAL:
   HSG: NYLON, GLASS-FILLED, UL94V-0, COLOR: BLACK
   CAP: NYLON, GLASS-FILLED, UL94V-0, COLOR: BLACK
   PIN: 0.64MM SQ, COPPER ALLOY
2. PLATING TYPE:
   (1) GOLD FLASH OVER
   1.25μm MIN. NICKEL OVERALL.
   (2) GOLD FLASH ON CONTACT AND
   2.50μm MIN. TIN ON SOLDERTAIL OVER
   1.25μm MIN. NICKEL OVERALL.
   (4) 0.38μm MIN. GOLD PLATE ON CONTACT AND
   2.00μm MIN. TIN ON SOLDERTAIL OVER
   1.25μm MIN. NICKEL OVERALL.
   (5) 0.75μm MIN. GOLD PLATE ON CONTACT AND
   2.00μm MIN. TIN ON SOLDERTAIL OVER
   1.25μm MIN. NICKEL OVERALL.
   (6) 2.50μm MIN. TIN OVERALL
   1.25μm MIN. NICKEL OVERALL
3. PRODUCT SPECIFICATION: PS-87920-019
4. PACKAGING TYPE: SEE TABLE
5. PACKAGING SPEC:
   TUBE WITH CAP VERSION: PK-89990-558
   TUBE W/O CAP VERSION: PK-89990-545
   EMBOSS TAPE WITH CAP: PK-89990-486
6. WAFER TO BE FLAT WITHIN 0.003 mm/mm
7. BEND DEPRESSION IS ACCEPTED SO LONG AS IT DOES NOT AFFECT THE OVERALL COPLANARITY OF TAIL
8. COPLANARITY IS TO BE MEASURED BY RESTING THE SOLDER TAIL ON A FLAT SURFACE
9. IRREGULAR CIRCUIT CUTOFF WITHIN BREAKAWAY SECTION IS PERMISSIBLE.CUTTING OR CHIPPING OF THE MAIN BODY IS NOT ACCEPTABLE
10. CAP LOCATION IS CENTERED ALONG THE MATING ENDS AS SHOWN. TOP SURFACE OF CAP TO BE FLAT FOR THE PURPOSE OF PICK & PLACE BY VACUUM SUCTION NOZZLE
11. RECOMMENDED PCB THICKNESS IS 1.60mm±0.10
12. THE ABOVE CKT 6 IS FOR ILLUSTRATION PURPOSE ONLY
13. TUBE LENGTH AS PER STANDARD 560mm

EWR#1228, +0209
EC NO: S2010-0966
DRWN:ATSEE 2010/05/20
CHK:PTLIM 2005/03/29
APPR:MLONG 2010/06/08
DESCRIPTION
B3
REV

QUALITY SYMBOLS
F_A=0
F_C=0
F_P=0

| GENERAL TOLERANCES (UNLESS SPECIFIED) | mm | INCH |
|---|---|---|
| 4 PLACES | ± --- | ± --- |
| 3 PLACES | ± --- | ± --- |
| 2 PLACES | ± 0.2 | ± --- |
| 1 PLACE | ± --- | ± --- |
| ANGULAR ± 3 ° | | |

DRAFT WHERE APPLICABLE MUST REMAIN WITHIN DIMENSIONS

| | | | |
|---|---|---|---|
| DIMENSION STYLE: MM ONLY | SCALE: NTS | DESIGN UNITS: METRIC | THIRD ANGLE PROJECTION |
| DRAWN BY: YLQIAO | DATE: 2005/03/14 | TITLE: CUSTOM HEADER 2.54MM PITCH SINGLE ROW SINGLE WAFER SMT HEADER | |
| CHECKED BY: PTLIM | DATE: 2005/03/29 | | |
| APPROVED BY: MLONG | DATE: 2010/03/10 | molex MOLEX INCORPORATED | |
| MATERIAL NO.: SEE TABLE | | DOCUMENT NO.: SD-87898-001 | SHEET NO.: 1 OF 20 |
| SIZE: A3 | THIS DRAWING CONTAINS INFORMATION THAT IS PROPRIETARY TO MOLEX INCORPORATED AND SHOULD NOT BE USED WITHOUT WRITTEN PERMISSION | | |

tb_frame_A3_P_AM_T
Rev. F 2009/06/18

Distributor of Molex Connector Corporation: Excellent Integrated System Limited
Datasheet of 0878980557 - 2.54MMSRSW SMT HDR W/CAP
Contact us: sales@integrated-circuit.com Website: www.integrated-circuit.com

| PACKAGING OPTION PART NO. | | | | | | CKT SIZE | VOID POSITION | PLATING TYPE | DIMENSION | | | | |
|---|---|---|---|---|---|---|---|---|---|---|---|---|---|
| TRAY WITHOUT CAP | TRAY WITH CAP | TUBE WITHOUT CAP | TUBE WITH CAP | TAPE & REEL WITHOUT CAP | TAPE & REEL WITH CAP | | | | A | B | G | F | M |
| 87898-0204 | ------- | ------- | ------- | ------- | ------- | 2 | ----- | 4 | 5.08 | 2.54 | 10.81 | 9.65 | 5.84 |
| 87898-0207 | ------- | ------- | ------- | ------- | ------- | 2 | ----- | 5 | 5.08 | 2.54 | 10.81 | 9.65 | 5.84 |
| ------- | ------- | ------- | 89990-0208 | ------- | 87898-0209 | 2 | ----- | 6 | 5.08 | 2.54 | 10.81 | 9.65 | 5.84 |
| 87898-0301 | ------- | ------- | ------- | ------- | ------- | 3 | ----- | 1 | 7.62 | 5.08 | 10.81 | 9.65 | 5.84 |
| 87898-0302 | ------- | ------- | ------- | ------- | ------- | 3 | ----- | 2 | 7.62 | 5.08 | 10.81 | 9.65 | 5.84 |
| 87898-0304 | ------- | ------- | ------- | ------- | ------- | 3 | ----- | 4 | 7.62 | 5.08 | 10.81 | 9.65 | 5.84 |
| 87898-0305 | ------- | ------- | ------- | ------- | ------- | 3 | ----- | 5 | 7.62 | 5.08 | 10.81 | 9.65 | 5.84 |
| 87898-0306 | ------- | ------- | ------- | ------- | ------- | 3 | ----- | 6 | 7.62 | 5.08 | 10.81 | 9.65 | 5.84 |

EWR#1228, +0209
EC NO: S2010-0966
DRWN:ATSEE 2010/05/20
CH'KD:PTLIM 2005/03/29
APPR:MLONG 2010/06/08
B3
REV
DESCRIPTION

QUALITY SYMBOLS
$F_A$=0
$F_C$=0
$F_P$=0

GENERAL TOLERANCES (UNLESS SPECIFIED)

| | mm | INCH |
|---|---|---|
| 4 PLACES | ± --- | ± --- |
| 3 PLACES | ± --- | ± --- |
| 2 PLACES | ± 0.2 | ± --- |
| 1 PLACE | ± --- | ± --- |

ANGULAR ± 3 °

DRAFT WHERE APPLICABLE MUST REMAIN WITHIN DIMENSIONS

DIMENSION STYLE: MM ONLY
SCALE: NTS
DESIGN UNITS: METRIC
THIRD ANGLE PROJECTION

DRAWN BY: YLQIAO DATE: 2005/03/14
CHECKED BY: PTLIM DATE: 2005/03/29
APPROVED BY: MLONG DATE: 2010/03/10
MATERIAL NO.: SEE TABLE
SIZE: A3

TITLE: CUSTOM HEADER 2.54MM PITCH SINGLE ROW SINGLE WAFER SMT HEADER
molex MOLEX INCORPORATED
DOCUMENT NO.: SD-87898-001
SHEET NO.: 2 OF 20

THIS DRAWING CONTAINS INFORMATION THAT IS PROPRIETARY TO MOLEX INCORPORATED AND SHOULD NOT BE USED WITHOUT WRITTEN PERMISSION

tb_frame_A3_P_AM_T
Rev. F 2009/06/18

| PACKAGING OPTION PART NO. | | | | | | CKT SIZE | VOID POSITION | PLATING TYPE | DIMENSION | | | | |
|---|---|---|---|---|---|---|---|---|---|---|---|---|---|
| TRAY WITHOUT CAP | TRAY WITH CAP | TUBE WITHOUT CAP | TUBE WITH CAP | TAPE & REEL WITHOUT CAP | TAPE & REEL WITH CAP | | | | A | B | G | F | M |
| ------- | ------- | 87898-0421 | 87898-0431 | ------- | 87898-0451 | 4 | ----- | 1 | 10.16 | 7.62 | 10.81 | 9.65 | 5.84 |
| ------- | ------- | 87898-0422 | 87898-0432 | ------- | 87898-0452 | 4 | ----- | 2 | 10.16 | 7.62 | 10.81 | 9.65 | 5.84 |
| ------- | ------- | 87898-0424 | 87898-0434 | ------- | 87898-0454 | 4 | ----- | 4 | 10.16 | 7.62 | 10.81 | 9.65 | 5.84 |
| ------- | ------- | 87898-0425 | 87898-0435 | ------- | 87898-0455 | 4 | ----- | 5 | 10.16 | 7.62 | 10.81 | 9.65 | 5.84 |
| ------- | ------- | 87898-0426 | 87898-0436 | ------- | 87898-0456 | 4 | ----- | 6 | 10.16 | 7.62 | 10.81 | 9.65 | 5.84 |
| | | | | | | | | | | | | | |
| | | | | | | | | | | | | | |
| ------- | ------- | 87898-0521 | 87898-0531 | ------- | 87898-0551 | 5 | ----- | 1 | 12.70 | 10.16 | 10.81 | 9.65 | 5.84 |
| ------- | ------- | 87898-0522 | 87898-0532 | ------- | 87898-0552 | 5 | ----- | 2 | 12.70 | 10.16 | 10.81 | 9.65 | 5.84 |
| ------- | ------- | 87898-0524 | 87898-0534 | ------- | 87898-0554 | 5 | ----- | 4 | 12.70 | 10.16 | 10.81 | 9.65 | 5.84 |
| ------- | ------- | 87898-0525 | 87898-0535 | ------- | 87898-0555 | 5 | ----- | 5 | 12.70 | 10.16 | 10.81 | 9.65 | 5.84 |
| ------- | ------- | 87898-0526 | 87898-0536 | ------- | 87898-0556 | 5 | ----- | 6 | 12.70 | 10.16 | 10.81 | 9.65 | 5.84 |
| | | | | | | | | | | | | | |
| | | | | | | | | | | | | | |
| ------- | ------- | 87898-0621 | 87898-0631 | ------- | 87898-0651 | 6 | ----- | 1 | 15.24 | 12.70 | 10.81 | 9.65 | 5.84 |
| ------- | ------- | 87898-0622 | 87898-0632 | ------- | 87898-0652 | 6 | ----- | 2 | 15.24 | 12.70 | 10.81 | 9.65 | 5.84 |
| ------- | ------- | 87898-0624 | 87898-0634 | ------- | 87898-0654 | 6 | ----- | 4 | 15.24 | 12.70 | 10.81 | 9.65 | 5.84 |
| ------- | ------- | 87898-0625 | 87898-0635 | ------- | 87898-0655 | 6 | ----- | 5 | 15.24 | 12.70 | 10.81 | 9.65 | 5.84 |
| ------- | ------- | 87898-0626 | 87898-0636 | ------- | 87898-0656 | 6 | ----- | 6 | 15.24 | 12.70 | 10.81 | 9.65 | 5.84 |

EWR#1228, +0209
EC NO: S2010-0966
DRWN:ATSEE 2010/05/20
CHKD:PTLIM 2005/03/29
APPR:MLONG 2010/06/08
DESCRIPTION
REV
B3

QUALITY SYMBOLS
=0
=0
=0

GENERAL TOLERANCES (UNLESS SPECIFIED)

| | mm | INCH |
|---|---|---|
| 4 PLACES | ± --- | ± --- |
| 3 PLACES | ± --- | ± --- |
| 2 PLACES | ± 0.2 | ± --- |
| 1 PLACE | ± --- | ± --- |
| ANGULAR ± 3 ° | | |

DRAFT WHERE APPLICABLE MUST REMAIN WITHIN DIMENSIONS

DIMENSION STYLE: MM ONLY
SCALE: NTS
DESIGN UNITS: METRIC
THIRD ANGLE PROJECTION

DRAWN BY: YLQIAO DATE: 2005/03/14
CHECKED BY: PTLIM DATE: 2005/03/29
APPROVED BY: MLONG DATE: 2010/03/10
MATERIAL NO.: SEE TABLE

TITLE: CUSTOM HEADER 2.54MM PITCH SINGLE ROW SINGLE WAFER SMT HEADER
MOLEX INCORPORATED
DOCUMENT NO.: SD-87898-001
SHEET NO.: 3 OF 20
SIZE: A3

THIS DRAWING CONTAINS INFORMATION THAT IS PROPRIETARY TO MOLEX INCORPORATED AND SHOULD NOT BE USED WITHOUT WRITTEN PERMISSION

tb_frame_A3_P_AM_T
Rev. F 2009/06/18

| PACKAGING OPTION PART NO. | | | | | | CKT SIZE | VOID POSITION | PLATING TYPE | DIMENSION | | | | |
|---|---|---|---|---|---|---|---|---|---|---|---|---|---|
| TRAY WITHOUT CAP | TRAY WITH CAP | TUBE WITHOUT CAP | TUBE WITH CAP | TAPE & REEL WITHOUT CAP | TAPE & REEL WITH CAP | | | | A | B | G | F | M |
| ------- | ------- | 87898-0721 | 87898-0731 | ------- | 87898-0751 | 7 | ----- | 1 | 17.78 | 15.24 | 10.81 | 9.65 | 5.84 |
| ------- | ------- | 87898-0722 | 87898-0732 | ------- | 87898-0752 | 7 | ----- | 2 | 17.78 | 15.24 | 10.81 | 9.65 | 5.84 |
| ------- | ------- | 87898-0724 | 87898-0734 | ------- | 87898-0754 | 7 | ----- | 4 | 17.78 | 15.24 | 10.81 | 9.65 | 5.84 |
| ------- | ------- | 87898-0725 | 87898-0735 | ------- | 87898-0755 | 7 | ----- | 5 | 17.78 | 15.24 | 10.81 | 9.65 | 5.84 |
| ------- | ------- | 87898-0726 | 87898-0736 | ------- | 87898-0756 | 7 | ----- | 6 | 17.78 | 15.24 | 10.81 | 9.65 | 5.84 |
| | | | | | | | | | | | | | |
| | | | | | | | | | | | | | |
| ------- | ------- | 87898-0821 | 87898-0831 | ------- | 87898-0851 | 8 | ----- | 1 | 20.32 | 17.78 | 10.81 | 9.65 | 5.84 |
| ------- | ------- | 87898-0822 | 87898-0832 | ------- | 87898-0852 | 8 | ----- | 2 | 20.32 | 17.78 | 10.81 | 9.65 | 5.84 |
| ------- | ------- | 87898-0824 | 87898-0834 | ------- | 87898-0854 | 8 | ----- | 4 | 20.32 | 17.78 | 10.81 | 9.65 | 5.84 |
| ------- | ------- | 87898-0825 | 87898-0835 | ------- | 87898-0855 | 8 | ----- | 5 | 20.32 | 17.78 | 10.81 | 9.65 | 5.84 |
| ------- | ------- | 87898-0826 | 87898-0836 | ------- | 87898-0856 | 8 | ----- | 6 | 20.32 | 17.78 | 10.81 | 9.65 | 5.84 |
| | | | | | | | | | | | | | |
| | | | | | | | | | | | | | |
| ------- | ------- | 87898-0921 | 87898-0931 | ------- | 87898-0951 | 9 | ----- | 1 | 22.86 | 20.32 | 10.81 | 9.65 | 5.84 |
| ------- | ------- | 87898-0922 | 87898-0932 | ------- | 87898-0952 | 9 | ----- | 2 | 22.86 | 20.32 | 10.81 | 9.65 | 5.84 |
| ------- | ------- | 87898-0924 | 87898-0934 | ------- | 87898-0954 | 9 | ----- | 4 | 22.86 | 20.32 | 10.81 | 9.65 | 5.84 |
| ------- | ------- | 87898-0925 | 87898-0935 | ------- | 87898-0955 | 9 | ----- | 5 | 22.86 | 20.32 | 10.81 | 9.65 | 5.84 |
| ------- | ------- | 87898-0926 | 87898-0936 | ------- | 87898-0956 | 9 | ----- | 6 | 22.86 | 20.32 | 10.81 | 9.65 | 5.84 |

EWR#1228, +0209 2010/05/20
EC NO: S2010-0966 2005/03/29
DRWN:ATSEE 2010/06/08
CHKD:PTLIM
APPR:MLONG
DESCRIPTION
B3
REV

QUALITY SYMBOLS
F/A=0
F/C=0
F/P=0

GENERAL TOLERANCES (UNLESS SPECIFIED)

| | mm | INCH |
|---|---|---|
| 4 PLACES | ± --- | ± --- |
| 3 PLACES | ± --- | ± --- |
| 2 PLACES | ± 0.2 | ± --- |
| 1 PLACE | ± --- | ± --- |
| ANGULAR ± 3 ° | | |

DRAFT WHERE APPLICABLE MUST REMAIN WITHIN DIMENSIONS

DIMENSION STYLE: MM ONLY
SCALE: NTS
DESIGN UNITS: METRIC
THIRD ANGLE PROJECTION

DRAWN BY: YLQIAO DATE: 2005/03/14
CHECKED BY: PTLIM DATE: 2005/03/29
APPROVED BY: MLONG DATE: 2010/03/10
MATERIAL NO.: SEE TABLE
SIZE: A3

TITLE: CUSTOM HEADER 2.54MM PITCH SINGLE ROW SINGLE WAFER SMT HEADER
molex MOLEX INCORPORATED
DOCUMENT NO.: SD-87898-001
SHEET NO.: 4 OF 20

THIS DRAWING CONTAINS INFORMATION THAT IS PROPRIETARY TO MOLEX INCORPORATED AND SHOULD NOT BE USED WITHOUT WRITTEN PERMISSION

tb_frame_A3_P_AM_T
Rev. F 2009/06/18

Distributor of Molex Connector Corporation: Excellent Integrated System Limited
Datasheet of 0878980557 - 2.54MMSRSW SMT HDR W/CAP
Contact us: sales@integrated-circuit.com Website: www.integrated-circuit.com

| PACKAGING OPTION PART NO. | | | | | | CKT SIZE | VOID POSITION | PLATING TYPE | DIMENSION | | | | |
|---|---|---|---|---|---|---|---|---|---|---|---|---|---|
| TRAY WITHOUT CAP | TRAY WITH CAP | TUBE WITHOUT CAP | TUBE WITH CAP | TAPE & REEL WITHOUT CAP | TAPE & REEL WITH CAP | | | | A | B | G | F | M |
| ------- | ------- | 87898-1021 | 87898-1031 | ------- | 87898-1051 | 10 | ----- | 1 | 25.40 | 22.86 | 10.81 | 9.65 | 5.84 |
| ------- | ------- | 87898-1022 | 87898-1032 | ------- | 87898-1052 | 10 | ----- | 2 | 25.40 | 22.86 | 10.81 | 9.65 | 5.84 |
| ------- | ------- | 87898-1024 | 87898-1034 | ------- | 87898-1054 | 10 | ----- | 4 | 25.40 | 22.86 | 10.81 | 9.65 | 5.84 |
| ------- | ------- | 87898-1025 | 87898-1035 | ------- | 87898-1055 | 10 | ----- | 5 | 25.40 | 22.86 | 10.81 | 9.65 | 5.84 |
| ------- | ------- | 87898-1026 | 87898-1036 | ------- | 87898-1056 | 10 | ----- | 6 | 25.40 | 22.86 | 10.81 | 9.65 | 5.84 |
| | | | | | | | | | | | | | |
| | | | | | | | | | | | | | |
| ------- | ------- | 87898-1121 | 87898-1131 | ------- | 87898-1151 | 11 | ----- | 1 | 27.94 | 25.40 | 10.81 | 9.65 | 5.84 |
| ------- | ------- | 87898-1122 | 87898-1132 | ------- | 87898-1152 | 11 | ----- | 2 | 27.94 | 25.40 | 10.81 | 9.65 | 5.84 |
| ------- | ------- | 87898-1124 | 87898-1134 | ------- | 87898-1154 | 11 | ----- | 4 | 27.94 | 25.40 | 10.81 | 9.65 | 5.84 |
| ------- | ------- | 87898-1125 | 87898-1135 | ------- | 87898-1155 | 11 | ----- | 5 | 27.94 | 25.40 | 10.81 | 9.65 | 5.84 |
| ------- | ------- | 87898-1126 | 87898-1136 | ------- | 87898-1156 | 11 | ----- | 6 | 27.94 | 25.40 | 10.81 | 9.65 | 5.84 |
| | | | | | | | | | | | | | |
| | | | | | | | | | | | | | |
| ------- | ------- | 87898-1221 | 87898-1231 | ------- | 87898-1251 | 12 | ----- | 1 | 30.48 | 27.94 | 10.81 | 9.65 | 5.84 |
| ------- | ------- | 87898-1222 | 87898-1232 | ------- | 87898-1252 | 12 | ----- | 2 | 30.48 | 27.94 | 10.81 | 9.65 | 5.84 |
| ------- | ------- | 87898-1224 | 87898-1234 | ------- | 87898-1254 | 12 | ----- | 4 | 30.48 | 27.94 | 10.81 | 9.65 | 5.84 |
| ------- | ------- | 87898-1225 | 87898-1235 | ------- | 87898-1255 | 12 | ----- | 5 | 30.48 | 27.94 | 10.81 | 9.65 | 5.84 |
| ------- | ------- | 87898-1226 | 87898-1236 | ------- | 87898-1256 | 12 | ----- | 6 | 30.48 | 27.94 | 10.81 | 9.65 | 5.84 |

EWR#1228, +0209
EC NO: S2010-0966
DRWN:ATSEE 2005/03/29
CHKD:PTLIM 2005/03/29
APPR:MLONG 2010/06/08
DESCRIPTION
REV
B3

QUALITY SYMBOLS
F/A=0
F/C=0
F/P=0

GENERAL TOLERANCES (UNLESS SPECIFIED)

| | mm | INCH |
|---|---|---|
| 4 PLACES | ± --- | ± --- |
| 3 PLACES | ± --- | ± --- |
| 2 PLACES | ± 0.2 | ± --- |
| 1 PLACE | ± --- | ± --- |
| ANGULAR ± 3 ° | | |

DRAFT WHERE APPLICABLE MUST REMAIN WITHIN DIMENSIONS

DIMENSION STYLE: MM ONLY
SCALE: NTS
DESIGN UNITS: METRIC
THIRD ANGLE PROJECTION

DRAWN BY: YLQIAO DATE: 2005/03/14
CHECKED BY: PTLIM DATE: 2005/03/29
APPROVED BY: MLONG DATE: 2010/03/10
MATERIAL NO.: SEE TABLE

TITLE: CUSTOM HEADER 2.54MM PITCH SINGLE ROW SINGLE WAFER SMT HEADER
MOLEX INCORPORATED
DOCUMENT NO.: SD-87898-001
SHEET NO.: 5 OF 20
SIZE: A3

THIS DRAWING CONTAINS INFORMATION THAT IS PROPRIETARY TO MOLEX INCORPORATED AND SHOULD NOT BE USED WITHOUT WRITTEN PERMISSION

tb_frame_A3_P_AM_T
Rev. F 2009/06/18

| PACKAGING OPTION PART NO. | | | | | | CKT SIZE | VOID POSITION | PLATING TYPE | DIMENSION | | | | |
|---|---|---|---|---|---|---|---|---|---|---|---|---|---|
| TRAY WITHOUT CAP | TRAY WITH CAP | TUBE WITHOUT CAP | TUBE WITH CAP | TAPE & REEL WITHOUT CAP | TAPE & REEL WITH CAP | | | | A | B | G | F | M |
| ------- | ------- | 87898-1321 | 87898-1331 | ------- | 87898-1351 | 13 | ----- | 1 | 33.02 | 30.48 | 10.81 | 9.65 | 5.84 |
| ------- | ------- | 87898-1322 | 87898-1332 | ------- | 87898-1352 | 13 | ----- | 2 | 33.02 | 30.48 | 10.81 | 9.65 | 5.84 |
| ------- | ------- | 87898-1324 | 87898-1334 | ------- | 87898-1354 | 13 | ----- | 4 | 33.02 | 30.48 | 10.81 | 9.65 | 5.84 |
| ------- | ------- | 87898-1325 | 87898-1335 | ------- | 87898-1355 | 13 | ----- | 5 | 33.02 | 30.48 | 10.81 | 9.65 | 5.84 |
| ------- | ------- | 87898-1326 | 87898-1336 | ------- | 87898-1356 | 13 | ----- | 6 | 33.02 | 30.48 | 10.81 | 9.65 | 5.84 |
| | | | | | | | | | | | | | |
| | | | | | | | | | | | | | |
| ------- | ------- | 87898-1421 | 87898-1431 | ------- | 87898-1451 | 14 | ----- | 1 | 35.56 | 33.02 | 10.81 | 9.65 | 5.84 |
| ------- | ------- | 87898-1422 | 87898-1432 | ------- | 87898-1452 | 14 | ----- | 2 | 35.56 | 33.02 | 10.81 | 9.65 | 5.84 |
| ------- | ------- | 87898-1424 | 87898-1434 | ------- | 87898-1454 | 14 | ----- | 4 | 35.56 | 33.02 | 10.81 | 9.65 | 5.84 |
| ------- | ------- | 87898-1425 | 87898-1435 | ------- | 87898-1455 | 14 | ----- | 5 | 35.56 | 33.02 | 10.81 | 9.65 | 5.84 |
| ------- | ------- | 87898-1426 | 87898-1436 | ------- | 87898-1456 | 14 | ----- | 6 | 35.56 | 33.02 | 10.81 | 9.65 | 5.84 |
| | | | | | | | | | | | | | |
| | | | | | | | | | | | | | |
| ------- | ------- | 87898-1521 | 87898-1531 | ------- | 87898-1551 | 15 | ----- | 1 | 38.10 | 35.56 | 10.81 | 9.65 | 5.84 |
| ------- | ------- | 87898-1522 | 87898-1532 | ------- | 87898-1552 | 15 | ----- | 2 | 38.10 | 35.56 | 10.81 | 9.65 | 5.84 |
| ------- | ------- | 87898-1524 | 87898-1534 | ------- | 87898-1554 | 15 | ----- | 4 | 38.10 | 35.56 | 10.81 | 9.65 | 5.84 |
| ------- | ------- | 87898-1525 | 87898-1535 | ------- | 87898-1555 | 15 | ----- | 5 | 38.10 | 35.56 | 10.81 | 9.65 | 5.84 |
| ------- | ------- | 87898-1526 | 87898-1536 | ------- | 87898-1556 | 15 | ----- | 6 | 38.10 | 35.56 | 10.81 | 9.65 | 5.84 |

EWR#1228, +0209
EC NO: S2010-0966
DRWN:ATSEE 2005/03/29
CHKD:PTLIM 2010/06/08
APPR:MLONG
DESCRIPTION
REV
B3

QUALITY SYMBOLS
=0
=0
=0

GENERAL TOLERANCES (UNLESS SPECIFIED)

| | mm | INCH |
|---|---|---|
| 4 PLACES | ± --- | ± --- |
| 3 PLACES | ± --- | ± --- |
| 2 PLACES | ± 0.2 | ± --- |
| 1 PLACE | ± --- | ± --- |
| ANGULAR ± 3 ° | | |

DRAFT WHERE APPLICABLE MUST REMAIN WITHIN DIMENSIONS

DIMENSION STYLE: MM ONLY
SCALE: NTS
DESIGN UNITS: METRIC
THIRD ANGLE PROJECTION

DRAWN BY: YLQIAO DATE: 2005/03/14
CHECKED BY: PTLIM DATE: 2005/03/29
APPROVED BY: MLONG DATE: 2010/03/10
MATERIAL NO.: SEE TABLE

TITLE: CUSTOM HEADER 2.54MM PITCH SINGLE ROW SINGLE WAFER SMT HEADER
MOLEX INCORPORATED
DOCUMENT NO.: SD-87898-001
SHEET NO.: 6 OF 20
SIZE: A3

THIS DRAWING CONTAINS INFORMATION THAT IS PROPRIETARY TO MOLEX INCORPORATED AND SHOULD NOT BE USED WITHOUT WRITTEN PERMISSION

tb_frame_A3_P_AM_T
Rev. F 2009/06/18

| PACKAGING OPTION PART NO. | | | | | | CKT SIZE | VOID POSITION | PLATING TYPE | DIMENSION | | | | |
|---|---|---|---|---|---|---|---|---|---|---|---|---|---|
| TRAY WITHOUT CAP | TRAY WITH CAP | TUBE WITHOUT CAP | TUBE WITH CAP | TAPE & REEL WITHOUT CAP | TAPE & REEL WITH CAP | | | | A | B | G | F | M |
| ------- | ------- | 87898-1621 | 87898-1631 | ------- | 87898-1651 | 16 | ----- | 1 | 40.64 | 38.10 | 10.81 | 9.65 | 5.84 |
| ------- | ------- | 87898-1622 | 87898-1632 | ------- | 87898-1652 | 16 | ----- | 2 | 40.64 | 38.10 | 10.81 | 9.65 | 5.84 |
| ------- | ------- | 87898-1624 | 87898-1634 | ------- | 87898-1654 | 16 | ----- | 4 | 40.64 | 38.10 | 10.81 | 9.65 | 5.84 |
| ------- | ------- | 87898-1625 | 87898-1635 | ------- | 87898-1655 | 16 | ----- | 5 | 40.64 | 38.10 | 10.81 | 9.65 | 5.84 |
| ------- | ------- | 87898-1626 | 87898-1636 | ------- | 87898-1656 | 16 | ----- | 6 | 40.64 | 38.10 | 10.81 | 9.65 | 5.84 |
| | | | | | | | | | | | | | |
| | | | | | | | | | | | | | |
| ------- | ------- | 87898-1721 | 87898-1731 | ------- | 87898-1751 | 17 | ----- | 1 | 43.18 | 40.64 | 10.81 | 9.65 | 5.84 |
| ------- | ------- | 87898-1722 | 87898-1732 | ------- | 87898-1752 | 17 | ----- | 2 | 43.18 | 40.64 | 10.81 | 9.65 | 5.84 |
| ------- | ------- | 87898-1724 | 87898-1734 | ------- | 87898-1754 | 17 | ----- | 4 | 43.18 | 40.64 | 10.81 | 9.65 | 5.84 |
| ------- | ------- | 87898-1725 | 87898-1735 | ------- | 87898-1755 | 17 | ----- | 5 | 43.18 | 40.64 | 10.81 | 9.65 | 5.84 |
| ------- | ------- | 87898-1726 | 87898-1736 | ------- | 87898-1756 | 17 | ----- | 6 | 43.18 | 40.64 | 10.81 | 9.65 | 5.84 |
| | | | | | | | | | | | | | |
| | | | | | | | | | | | | | |
| ------- | ------- | 87898-1821 | 87898-1831 | ------- | 87898-1851 | 18 | ----- | 1 | 45.72 | 43.18 | 10.81 | 9.65 | 5.84 |
| ------- | ------- | 87898-1822 | 87898-1832 | ------- | 87898-1852 | 18 | ----- | 2 | 45.72 | 43.18 | 10.81 | 9.65 | 5.84 |
| ------- | ------- | 87898-1824 | 87898-1834 | ------- | 87898-1854 | 18 | ----- | 4 | 45.72 | 43.18 | 10.81 | 9.65 | 5.84 |
| ------- | ------- | 87898-1825 | 87898-1835 | ------- | 87898-1855 | 18 | ----- | 5 | 45.72 | 43.18 | 10.81 | 9.65 | 5.84 |
| ------- | ------- | 87898-1826 | 87898-1836 | ------- | 87898-1856 | 18 | ----- | 6 | 45.72 | 43.18 | 10.81 | 9.65 | 5.84 |

EWR#1228, +0209
EC NO: S2010-0966
DRWN:ATSEE 2010/05/20
CHKD:PTLIM 2005/03/29
APPR:MLONG 2010/06/08
DESCRIPTION
B3
REV

QUALITY SYMBOLS
F/A=0
F/C=0
F/F=0

GENERAL TOLERANCES (UNLESS SPECIFIED)

| | mm | INCH |
|---|---|---|
| 4 PLACES | ± --- | ± --- |
| 3 PLACES | ± --- | ± --- |
| 2 PLACES | ± 0.2 | ± --- |
| 1 PLACE | ± --- | ± --- |
| ANGULAR ± 3 ° | | |

DRAFT WHERE APPLICABLE MUST REMAIN WITHIN DIMENSIONS

DIMENSION STYLE: MM ONLY
SCALE: NTS
DESIGN UNITS: METRIC
THIRD ANGLE PROJECTION

DRAWN BY: YLQIAO DATE: 2005/03/14
CHECKED BY: PTLIM DATE: 2005/03/29
APPROVED BY: MLONG DATE: 2010/03/10
MATERIAL NO.: SEE TABLE

TITLE: CUSTOM HEADER 2.54MM PITCH SINGLE ROW SINGLE WAFER SMT HEADER
MOLEX INCORPORATED
DOCUMENT NO.: SD-87898-001
SHEET NO.: 7 OF 20
SIZE: A3

THIS DRAWING CONTAINS INFORMATION THAT IS PROPRIETARY TO MOLEX INCORPORATED AND SHOULD NOT BE USED WITHOUT WRITTEN PERMISSION

tb_frame_A3_P_AM_T
Rev. F 2009/06/18

| PACKAGING OPTION PART NO. | | | | | | CKT SIZE | VOID POSITION | PLATING TYPE | DIMENSION | | | | |
|---|---|---|---|---|---|---|---|---|---|---|---|---|---|
| TRAY WITHOUT CAP | TRAY WITH CAP | TUBE WITHOUT CAP | TUBE WITH CAP | TAPE & REEL WITHOUT CAP | TAPE & REEL WITH CAP | | | | A | B | G | F | M |
| ------- | ------- | 87898-1921 | 87898-1931 | ------- | 87898-1951 | 19 | ----- | 1 | 48.26 | 45.72 | 10.81 | 9.65 | 5.84 |
| ------- | ------- | 87898-1922 | 87898-1932 | ------- | 87898-1952 | 19 | ----- | 2 | 48.26 | 45.72 | 10.81 | 9.65 | 5.84 |
| ------- | ------- | 87898-1924 | 87898-1934 | ------- | 87898-1954 | 19 | ----- | 4 | 48.26 | 45.72 | 10.81 | 9.65 | 5.84 |
| ------- | ------- | 87898-1925 | 87898-1935 | ------- | 87898-1955 | 19 | ----- | 5 | 48.26 | 45.72 | 10.81 | 9.65 | 5.84 |
| ------- | ------- | 87898-1926 | 87898-1936 | ------- | 87898-1956 | 19 | ----- | 6 | 48.26 | 45.72 | 10.81 | 9.65 | 5.84 |
| | | | | | | | | | | | | | |
| | | | | | | | | | | | | | |
| ------- | ------- | 87898-2021 | 87898-2031 | ------- | 87898-2051 | 20 | ----- | 1 | 50.80 | 48.26 | 10.81 | 9.65 | 5.84 |
| ------- | ------- | 87898-2022 | 87898-2032 | ------- | 87898-2052 | 20 | ----- | 2 | 50.80 | 48.26 | 10.81 | 9.65 | 5.84 |
| ------- | ------- | 87898-2024 | 87898-2034 | ------- | 87898-2054 | 20 | ----- | 4 | 50.80 | 48.26 | 10.81 | 9.65 | 5.84 |
| ------- | ------- | 87898-2025 | 87898-2035 | ------- | 87898-2055 | 20 | ----- | 5 | 50.80 | 48.26 | 10.81 | 9.65 | 5.84 |
| ------- | ------- | 87898-2026 | 87898-2036 | ------- | 87898-2056 | 20 | ----- | 6 | 50.80 | 48.26 | 10.81 | 9.65 | 5.84 |
| | | | | | | | | | | | | | |
| | | | | | | | | | | | | | |
| ------- | ------- | 87898-2121 | 87898-2131 | ------- | 87898-2151 | 21 | ----- | 1 | 53.34 | 50.80 | 10.81 | 9.65 | 5.84 |
| ------- | ------- | 87898-2122 | 87898-2132 | ------- | 87898-2152 | 21 | ----- | 2 | 53.34 | 50.80 | 10.81 | 9.65 | 5.84 |
| ------- | ------- | 87898-2124 | 87898-2134 | ------- | 87898-2154 | 21 | ----- | 4 | 53.34 | 50.80 | 10.81 | 9.65 | 5.84 |
| ------- | ------- | 87898-2125 | 87898-2135 | ------- | 87898-2155 | 21 | ----- | 5 | 53.34 | 50.80 | 10.81 | 9.65 | 5.84 |
| ------- | ------- | 87898-2126 | 87898-2136 | ------- | 87898-2156 | 21 | ----- | 6 | 53.34 | 50.80 | 10.81 | 9.65 | 5.84 |

EWR#1228, +0209 2010/05/20
EC NO: S2010-0966 2005/03/29
DRWN:ATSEE 2010/06/08
CHKD:PTLIM
APPR:MLONG
DESCRIPTION
REV
B3

QUALITY SYMBOLS
F/A=0
F/C=0
F/P=0

GENERAL TOLERANCES (UNLESS SPECIFIED)

| | mm | INCH |
|---|---|---|
| 4 PLACES | ± --- | ± --- |
| 3 PLACES | ± --- | ± --- |
| 2 PLACES | ± 0.2 | ± --- |
| 1 PLACE | ± --- | ± --- |
| ANGULAR ± 3 ° | | |

DRAFT WHERE APPLICABLE MUST REMAIN WITHIN DIMENSIONS

DIMENSION STYLE: MM ONLY
SCALE: NTS
DESIGN UNITS: METRIC
THIRD ANGLE PROJECTION

DRAWN BY: YLQIAO DATE: 2005/03/14
CHECKED BY: PTLIM DATE: 2005/03/29
APPROVED BY: MLONG DATE: 2010/03/10
MATERIAL NO.: SEE TABLE

TITLE: CUSTOM HEADER 2.54MM PITCH SINGLE ROW SINGLE WAFER SMT HEADER
MOLEX INCORPORATED
DOCUMENT NO.: SD-87898-001
SHEET NO.: 8 OF 20
SIZE: A3

THIS DRAWING CONTAINS INFORMATION THAT IS PROPRIETARY TO MOLEX INCORPORATED AND SHOULD NOT BE USED WITHOUT WRITTEN PERMISSION

tb_frame_A3_P_AM_T
Rev. F 2009/06/18

| PACKAGING OPTION PART NO. | | | | | | CKT SIZE | VOID POSITION | PLATING TYPE | DIMENSION | | | | |
|---|---|---|---|---|---|---|---|---|---|---|---|---|---|
| TRAY WITHOUT CAP | TRAY WITH CAP | TUBE WITHOUT CAP | TUBE WITH CAP | TAPE & REEL WITHOUT CAP | TAPE & REEL WITH CAP | | | | A | B | G | F | M |
| ------- | ------- | 87898-2221 | 87898-2231 | ------- | ------- | 22 | ----- | 1 | 55.88 | 53.34 | 10.81 | 9.65 | 5.84 |
| ------- | ------- | 87898-2222 | 87898-2232 | ------- | ------- | 22 | ----- | 2 | 55.88 | 53.34 | 10.81 | 9.65 | 5.84 |
| ------- | ------- | 87898-2224 | 87898-2234 | ------- | ------- | 22 | ----- | 4 | 55.88 | 53.34 | 10.81 | 9.65 | 5.84 |
| ------- | ------- | 87898-2225 | 87898-2235 | ------- | ------- | 22 | ----- | 5 | 55.88 | 53.34 | 10.81 | 9.65 | 5.84 |
| ------- | ------- | 87898-2226 | 87898-2236 | ------- | ------- | 22 | ----- | 6 | 55.88 | 53.34 | 10.81 | 9.65 | 5.84 |
| | | | | | | | | | | | | | |
| | | | | | | | | | | | | | |
| ------- | ------- | 87898-2321 | 87898-2331 | ------- | ------- | 23 | ----- | 1 | 58.42 | 55.88 | 10.81 | 9.65 | 5.84 |
| ------- | ------- | 87898-2322 | 87898-2332 | ------- | ------- | 23 | ----- | 2 | 58.42 | 55.88 | 10.81 | 9.65 | 5.84 |
| ------- | ------- | 87898-2324 | 87898-2334 | ------- | ------- | 23 | ----- | 4 | 58.42 | 55.88 | 10.81 | 9.65 | 5.84 |
| ------- | ------- | 87898-2325 | 87898-2335 | ------- | ------- | 23 | ----- | 5 | 58.42 | 55.88 | 10.81 | 9.65 | 5.84 |
| ------- | ------- | 87898-2326 | 87898-2336 | ------- | ------- | 23 | ----- | 6 | 58.42 | 55.88 | 10.81 | 9.65 | 5.84 |
| | | | | | | | | | | | | | |
| | | | | | | | | | | | | | |
| ------- | ------- | 87898-2421 | 87898-2431 | ------- | ------- | 24 | ----- | 1 | 60.96 | 58.42 | 10.81 | 9.65 | 5.84 |
| ------- | ------- | 87898-2422 | 87898-2432 | ------- | ------- | 24 | ----- | 2 | 60.96 | 58.42 | 10.81 | 9.65 | 5.84 |
| ------- | ------- | 87898-2424 | 87898-2434 | ------- | ------- | 24 | ----- | 4 | 60.96 | 58.42 | 10.81 | 9.65 | 5.84 |
| ------- | ------- | 87898-2425 | 87898-2435 | ------- | ------- | 24 | ----- | 5 | 60.96 | 58.42 | 10.81 | 9.65 | 5.84 |
| ------- | ------- | 87898-2426 | 87898-2436 | ------- | ------- | 24 | ----- | 6 | 60.96 | 58.42 | 10.81 | 9.65 | 5.84 |

EWR#1228, +0209
EC NO: S2010-0966
DRWN:ATSEE 2005/03/29
CHKD:PTLIM 2010/06/08
APPR:MLONG
DESCRIPTION
REV
B3

QUALITY SYMBOLS
F/V=0
F/C=0
F/P=0

GENERAL TOLERANCES (UNLESS SPECIFIED)

| | mm | INCH |
|---|---|---|
| 4 PLACES | ± --- | ± --- |
| 3 PLACES | ± --- | ± --- |
| 2 PLACES | ± 0.2 | ± --- |
| 1 PLACE | ± --- | ± --- |
| ANGULAR ± 3 ° | | |

DRAFT WHERE APPLICABLE MUST REMAIN WITHIN DIMENSIONS

DIMENSION STYLE: MM ONLY
SCALE: NTS
DESIGN UNITS: METRIC
THIRD ANGLE PROJECTION

| | | |
|---|---|---|
| DRAWN BY | YLQIAO | DATE 2005/03/14 |
| CHECKED BY | PTLIM | DATE 2005/03/29 |
| APPROVED BY | MLONG | DATE 2010/03/10 |
| MATERIAL NO. | SEE TABLE | |

TITLE: CUSTOM HEADER 2.54MM PITCH SINGLE ROW SINGLE WAFER SMT HEADER

molex MOLEX INCORPORATED

DOCUMENT NO. SD-87898-001
SHEET NO. 9 OF 20
SIZE A3

THIS DRAWING CONTAINS INFORMATION THAT IS PROPRIETARY TO MOLEX INCORPORATED AND SHOULD NOT BE USED WITHOUT WRITTEN PERMISSION

tb_frame_A3_P_AM_T
Rev. F 2009/06/18

| PACKAGING OPTION PART NO. | | | | | | CKT SIZE | VOID POSITION | PLATING TYPE | DIMENSION | | | | |
|---|---|---|---|---|---|---|---|---|---|---|---|---|---|
| TRAY WITHOUT CAP | TRAY WITH CAP | TUBE WITHOUT CAP | TUBE WITH CAP | TAPE & REEL WITHOUT CAP | TAPE & REEL WITH CAP | | | | A | B | G | F | M |
| ------- | ------- | 87898-2521 | 87898-2531 | ------- | ------- | 25 | ----- | 1 | 63.50 | 60.96 | 10.81 | 9.65 | 5.84 |
| ------- | ------- | 87898-2522 | 87898-2532 | ------- | ------- | 25 | ----- | 2 | 63.50 | 60.96 | 10.81 | 9.65 | 5.84 |
| ------- | ------- | 87898-2524 | 87898-2534 | ------- | ------- | 25 | ----- | 4 | 63.50 | 60.96 | 10.81 | 9.65 | 5.84 |
| ------- | ------- | 87898-2525 | 87898-2535 | ------- | ------- | 25 | ----- | 5 | 63.50 | 60.96 | 10.81 | 9.65 | 5.84 |
| ------- | ------- | 87898-2526 | 87898-2536 | ------- | ------- | 25 | ----- | 6 | 63.50 | 60.96 | 10.81 | 9.65 | 5.84 |
| | | | | | | | | | | | | | |
| | | | | | | | | | | | | | |
| ------- | ------- | 87898-2621 | 87898-2631 | ------- | ------- | 26 | ----- | 1 | 66.04 | 63.50 | 10.81 | 9.65 | 5.84 |
| ------- | ------- | 87898-2622 | 87898-2632 | ------- | ------- | 26 | ----- | 2 | 66.04 | 63.50 | 10.81 | 9.65 | 5.84 |
| ------- | ------- | 87898-2624 | 87898-2634 | ------- | ------- | 26 | ----- | 4 | 66.04 | 63.50 | 10.81 | 9.65 | 5.84 |
| ------- | ------- | 87898-2625 | 87898-2635 | ------- | ------- | 26 | ----- | 5 | 66.04 | 63.50 | 10.81 | 9.65 | 5.84 |
| ------- | ------- | 87898-2626 | 87898-2636 | ------- | ------- | 26 | ----- | 6 | 66.04 | 63.50 | 10.81 | 9.65 | 5.84 |
| | | | | | | | | | | | | | |
| | | | | | | | | | | | | | |
| ------- | ------- | 87898-2721 | 87898-2731 | ------- | ------- | 27 | ----- | 1 | 68.58 | 66.04 | 10.81 | 9.65 | 5.84 |
| ------- | ------- | 87898-2722 | 87898-2732 | ------- | ------- | 27 | ----- | 2 | 68.58 | 66.04 | 10.81 | 9.65 | 5.84 |
| ------- | ------- | 87898-2724 | 87898-2734 | ------- | ------- | 27 | ----- | 4 | 68.58 | 66.04 | 10.81 | 9.65 | 5.84 |
| ------- | ------- | 87898-2725 | 87898-2735 | ------- | ------- | 27 | ----- | 5 | 68.58 | 66.04 | 10.81 | 9.65 | 5.84 |
| ------- | ------- | 87898-2726 | 87898-2736 | ------- | ------- | 27 | ----- | 6 | 68.58 | 66.04 | 10.81 | 9.65 | 5.84 |

EWR#1228, +0209
EC NO: S2010-0966 2010/05/20
DRWN:ATSEE 2005/03/29
CHKD:PTLIM 2010/06/08
APPR:MLONG
DESCRIPTION
REV
B3

QUALITY SYMBOLS
F=0
G=0
M=0

GENERAL TOLERANCES (UNLESS SPECIFIED)

| | mm | INCH |
|---|---|---|
| 4 PLACES | ± --- | ± --- |
| 3 PLACES | ± --- | ± --- |
| 2 PLACES | ± 0.2 | ± --- |
| 1 PLACE | ± --- | ± --- |
| ANGULAR ± 3 ° | | |

DRAFT WHERE APPLICABLE MUST REMAIN WITHIN DIMENSIONS

DIMENSION STYLE: MM ONLY
SCALE: NTS
DESIGN UNITS: METRIC
THIRD ANGLE PROJECTION

| | | |
|---|---|---|
| DRAWN BY | YLQIAO | DATE 2005/03/14 |
| CHECKED BY | PTLIM | DATE 2005/03/29 |
| APPROVED BY | MLONG | DATE 2010/03/10 |
| MATERIAL NO. | SEE TABLE | |

TITLE: CUSTOM HEADER 2.54MM PITCH SINGLE ROW SINGLE WAFER SMT HEADER

molex MOLEX INCORPORATED

DOCUMENT NO. SD-87898-001
SHEET NO. 10 OF 20
SIZE A3

THIS DRAWING CONTAINS INFORMATION THAT IS PROPRIETARY TO MOLEX INCORPORATED AND SHOULD NOT BE USED WITHOUT WRITTEN PERMISSION

tb_frame_A3_P_AM_T
Rev. F 2009/06/18

| PACKAGING OPTION PART NO. | | | | | | CKT SIZE | VOID POSITION | PLATING TYPE | DIMENSION | | | | |
|---|---|---|---|---|---|---|---|---|---|---|---|---|---|
| TRAY WITHOUT CAP | TRAY WITH CAP | TUBE WITHOUT CAP | TUBE WITH CAP | TAPE & REEL WITHOUT CAP | TAPE & REEL WITH CAP | | | | A | B | G | F | M |
| ------- | ------- | 87898-2821 | 87898-2831 | ------- | ------- | 28 | ----- | 1 | 71.12 | 68.58 | 10.81 | 9.65 | 5.84 |
| ------- | ------- | 87898-2822 | 87898-2832 | ------- | ------- | 28 | ----- | 2 | 71.12 | 68.58 | 10.81 | 9.65 | 5.84 |
| ------- | ------- | 87898-2824 | 87898-2834 | ------- | ------- | 28 | ----- | 4 | 71.12 | 68.58 | 10.81 | 9.65 | 5.84 |
| ------- | ------- | 87898-2825 | 87898-2835 | ------- | ------- | 28 | ----- | 5 | 71.12 | 68.58 | 10.81 | 9.65 | 5.84 |
| ------- | ------- | 87898-2826 | 87898-2836 | ------- | ------- | 28 | ----- | 6 | 71.12 | 68.58 | 10.81 | 9.65 | 5.84 |
| | | | | | | | | | | | | | |
| | | | | | | | | | | | | | |
| ------- | ------- | 87898-2921 | 87898-2931 | ------- | ------- | 29 | ----- | 1 | 73.66 | 71.12 | 10.81 | 9.65 | 5.84 |
| ------- | ------- | 87898-2922 | 87898-2932 | ------- | ------- | 29 | ----- | 2 | 73.66 | 71.12 | 10.81 | 9.65 | 5.84 |
| ------- | ------- | 87898-2924 | 87898-2934 | ------- | ------- | 29 | ----- | 4 | 73.66 | 71.12 | 10.81 | 9.65 | 5.84 |
| ------- | ------- | 87898-2925 | 87898-2935 | ------- | ------- | 29 | ----- | 5 | 73.66 | 71.12 | 10.81 | 9.65 | 5.84 |
| ------- | ------- | 87898-2926 | 87898-2936 | ------- | ------- | 29 | ----- | 6 | 73.66 | 71.12 | 10.81 | 9.65 | 5.84 |
| | | | | | | | | | | | | | |
| | | | | | | | | | | | | | |
| ------- | ------- | 87898-3021 | 87898-3031 | ------- | ------- | 30 | ----- | 1 | 76.20 | 73.66 | 10.81 | 9.65 | 5.84 |
| ------- | ------- | 87898-3022 | 87898-3032 | ------- | ------- | 30 | ----- | 2 | 76.20 | 73.66 | 10.81 | 9.65 | 5.84 |
| ------- | ------- | 87898-3024 | 87898-3034 | ------- | ------- | 30 | ----- | 4 | 76.20 | 73.66 | 10.81 | 9.65 | 5.84 |
| ------- | ------- | 87898-3025 | 87898-3035 | ------- | ------- | 30 | ----- | 5 | 76.20 | 73.66 | 10.81 | 9.65 | 5.84 |
| ------- | ------- | 87898-3026 | 87898-3036 | ------- | ------- | 30 | ----- | 6 | 76.20 | 73.66 | 10.81 | 9.65 | 5.84 |

EWR#1228, +0209
EC NO: S2010-0966
DRWN:ATSEE 2010/05/20
CHKD:PTLIM 2005/03/29
APPR:MLONG 2010/06/08
DESCRIPTION
B3
REV

QUALITY SYMBOLS
$\sqrt{F_A}$=0
$\sqrt{F_C}$=0
$\sqrt{F_P}$=0

GENERAL TOLERANCES (UNLESS SPECIFIED)

| | mm | INCH |
|---|---|---|
| 4 PLACES | ± --- | ± --- |
| 3 PLACES | ± --- | ± --- |
| 2 PLACES | ± 0.2 | ± --- |
| 1 PLACE | ± --- | ± --- |
| ANGULAR ± 3 ° | | |

DRAFT WHERE APPLICABLE MUST REMAIN WITHIN DIMENSIONS

DIMENSION STYLE: MM ONLY
SCALE: NTS
DESIGN UNITS: METRIC
THIRD ANGLE PROJECTION

DRAWN BY: YLQIAO DATE: 2005/03/14
CHECKED BY: PTLIM DATE: 2005/03/29
APPROVED BY: MLONG DATE: 2010/03/10
MATERIAL NO.: SEE TABLE

TITLE: CUSTOM HEADER 2.54MM PITCH SINGLE ROW SINGLE WAFER SMT HEADER
molex MOLEX INCORPORATED
DOCUMENT NO.: SD-87898-001
SHEET NO.: 11 OF 20
SIZE: A3

THIS DRAWING CONTAINS INFORMATION THAT IS PROPRIETARY TO MOLEX INCORPORATED AND SHOULD NOT BE USED WITHOUT WRITTEN PERMISSION

tb_frame_A3_P_AM_T
Rev. F 2009/06/18

| PACKAGING OPTION PART NO. | | | | | | CKT SIZE | VOID POSITION | PLATING TYPE | DIMENSION | | | | |
|---|---|---|---|---|---|---|---|---|---|---|---|---|---|
| TRAY WITHOUT CAP | TRAY WITH CAP | TUBE WITHOUT CAP | TUBE WITH CAP | TAPE & REEL WITHOUT CAP | TAPE & REEL WITH CAP | | | | A | B | G | F | M |
| ------- | ------- | 87898-3121 | 87898-3131 | ------- | ------- | 31 | ----- | 1 | 78.74 | 76.20 | 10.81 | 9.65 | 5.84 |
| ------- | ------- | 87898-3122 | 87898-3132 | ------- | ------- | 31 | ----- | 2 | 78.74 | 76.20 | 10.81 | 9.65 | 5.84 |
| ------- | ------- | 87898-3124 | 87898-3134 | ------- | ------- | 31 | ----- | 4 | 78.74 | 76.20 | 10.81 | 9.65 | 5.84 |
| ------- | ------- | 87898-3125 | 87898-3135 | ------- | ------- | 31 | ----- | 5 | 78.74 | 76.20 | 10.81 | 9.65 | 5.84 |
| ------- | ------- | 87898-3126 | 87898-3136 | ------- | ------- | 31 | ----- | 6 | 78.74 | 76.20 | 10.81 | 9.65 | 5.84 |
| | | | | | | | | | | | | | |
| | | | | | | | | | | | | | |
| ------- | ------- | 87898-3221 | 87898-3231 | ------- | ------- | 32 | ----- | 1 | 81.28 | 78.74 | 10.81 | 9.65 | 5.84 |
| ------- | ------- | 87898-3222 | 87898-3232 | ------- | ------- | 32 | ----- | 2 | 81.28 | 78.74 | 10.81 | 9.65 | 5.84 |
| ------- | ------- | 87898-3224 | 87898-3234 | ------- | ------- | 32 | ----- | 4 | 81.28 | 78.74 | 10.81 | 9.65 | 5.84 |
| ------- | ------- | 87898-3225 | 87898-3235 | ------- | ------- | 32 | ----- | 5 | 81.28 | 78.74 | 10.81 | 9.65 | 5.84 |
| ------- | ------- | 87898-3226 | 87898-3236 | ------- | ------- | 32 | ----- | 6 | 81.28 | 78.74 | 10.81 | 9.65 | 5.84 |
| | | | | | | | | | | | | | |
| | | | | | | | | | | | | | |
| ------- | ------- | 87898-3321 | 87898-3331 | ------- | ------- | 33 | ----- | 1 | 83.82 | 81.28 | 10.81 | 9.65 | 5.84 |
| ------- | ------- | 87898-3322 | 87898-3332 | ------- | ------- | 33 | ----- | 2 | 83.82 | 81.28 | 10.81 | 9.65 | 5.84 |
| ------- | ------- | 87898-3324 | 87898-3334 | ------- | ------- | 33 | ----- | 4 | 83.82 | 81.28 | 10.81 | 9.65 | 5.84 |
| ------- | ------- | 87898-3325 | 87898-3335 | ------- | ------- | 33 | ----- | 5 | 83.82 | 81.28 | 10.81 | 9.65 | 5.84 |
| ------- | ------- | 87898-3326 | 87898-3336 | ------- | ------- | 33 | ----- | 6 | 83.82 | 81.28 | 10.81 | 9.65 | 5.84 |

EWR#1228, +0209
EC NO: S2010-0966
DRWN:ATSEE 2010/05/20
CHKD:PTLIM 2005/03/29
APPR:MLONG 2010/06/08
DESCRIPTION
B3
REV

QUALITY SYMBOLS
=0
=0
=0

GENERAL TOLERANCES (UNLESS SPECIFIED)

| | mm | INCH |
|---|---|---|
| 4 PLACES | ± --- | ± --- |
| 3 PLACES | ± --- | ± --- |
| 2 PLACES | ± 0.2 | ± --- |
| 1 PLACE | ± --- | ± --- |
| ANGULAR ± 3 ° | | |

DRAFT WHERE APPLICABLE MUST REMAIN WITHIN DIMENSIONS

DIMENSION STYLE: MM ONLY
SCALE: NTS
DESIGN UNITS: METRIC
THIRD ANGLE PROJECTION

DRAWN BY: YLQIAO DATE: 2005/03/14
CHECKED BY: PTLIM DATE: 2005/03/29
APPROVED BY: MLONG DATE: 2010/03/10
MATERIAL NO.: SEE TABLE

TITLE: CUSTOM HEADER 2.54MM PITCH SINGLE ROW SINGLE WAFER SMT HEADER
MOLEX INCORPORATED
DOCUMENT NO.: SD-87898-001
SHEET NO.: 12 OF 20
SIZE: A3

THIS DRAWING CONTAINS INFORMATION THAT IS PROPRIETARY TO MOLEX INCORPORATED AND SHOULD NOT BE USED WITHOUT WRITTEN PERMISSION

tb_frame_A3_P_AM_T
Rev. F 2009/06/18

| PACKAGING OPTION PART NO. | | | | | | CKT SIZE | VOID POSITION | PLATING TYPE | DIMENSION | | | | |
|---|---|---|---|---|---|---|---|---|---|---|---|---|---|
| TRAY WITHOUT CAP | TRAY WITH CAP | TUBE WITHOUT CAP | TUBE WITH CAP | TAPE & REEL WITHOUT CAP | TAPE & REEL WITH CAP | | | | A | B | G | F | M |
| ------- | ------- | 87898-3421 | 87898-3431 | ------- | ------- | 34 | ----- | 1 | 86.36 | 83.82 | 10.81 | 9.65 | 5.84 |
| ------- | ------- | 87898-3422 | 87898-3432 | ------- | ------- | 34 | ----- | 2 | 86.36 | 83.82 | 10.81 | 9.65 | 5.84 |
| ------- | ------- | 87898-3424 | 87898-3434 | ------- | ------- | 34 | ----- | 4 | 86.36 | 83.82 | 10.81 | 9.65 | 5.84 |
| ------- | ------- | 87898-3425 | 87898-3435 | ------- | ------- | 34 | ----- | 5 | 86.36 | 83.82 | 10.81 | 9.65 | 5.84 |
| ------- | ------- | 87898-3426 | 87898-3436 | ------- | ------- | 34 | ----- | 6 | 86.36 | 83.82 | 10.81 | 9.65 | 5.84 |
| | | | | | | | | | | | | | |
| | | | | | | | | | | | | | |
| ------- | ------- | 87898-3521 | 87898-3531 | ------- | ------- | 35 | ----- | 1 | 88.90 | 86.36 | 10.81 | 9.65 | 5.84 |
| ------- | ------- | 87898-3522 | 87898-3532 | ------- | ------- | 35 | ----- | 2 | 88.90 | 86.36 | 10.81 | 9.65 | 5.84 |
| ------- | ------- | 87898-3524 | 87898-3534 | ------- | ------- | 35 | ----- | 4 | 88.90 | 86.36 | 10.81 | 9.65 | 5.84 |
| ------- | ------- | 87898-3525 | 87898-3535 | ------- | ------- | 35 | ----- | 5 | 88.90 | 86.36 | 10.81 | 9.65 | 5.84 |
| ------- | ------- | 87898-3526 | 87898-3536 | ------- | ------- | 35 | ----- | 6 | 88.90 | 86.36 | 10.81 | 9.65 | 5.84 |
| | | | | | | | | | | | | | |
| | | | | | | | | | | | | | |
| ------- | ------- | 87898-3621 | 87898-3631 | ------- | ------- | 36 | ----- | 1 | 91.44 | 88.90 | 10.81 | 9.65 | 5.84 |
| ------- | ------- | 87898-3622 | 87898-3632 | ------- | ------- | 36 | ----- | 2 | 91.44 | 88.90 | 10.81 | 9.65 | 5.84 |
| ------- | ------- | 87898-3624 | 87898-3634 | ------- | ------- | 36 | ----- | 4 | 91.44 | 88.90 | 10.81 | 9.65 | 5.84 |
| ------- | ------- | 87898-3625 | 87898-3635 | ------- | ------- | 36 | ----- | 5 | 91.44 | 88.90 | 10.81 | 9.65 | 5.84 |
| ------- | ------- | 87898-3626 | 87898-3636 | ------- | ------- | 36 | ----- | 6 | 91.44 | 88.90 | 10.81 | 9.65 | 5.84 |

EWR#1228, +0209
EC NO: S2010-0966
DRWN:ATSEE 2010/05/20
CH'KD:PTLIM 2005/03/29
APPR:MLONG 2010/06/08
B3
REV
DESCRIPTION

QUALITY SYMBOLS
$F_A$=0
$F_C$=0
$F_P$=0

GENERAL TOLERANCES (UNLESS SPECIFIED)

| | mm | INCH |
|---|---|---|
| 4 PLACES | ± --- | ± --- |
| 3 PLACES | ± --- | ± --- |
| 2 PLACES | ± 0.2 | ± --- |
| 1 PLACE | ± --- | ± --- |

ANGULAR ± 3 °

DRAFT WHERE APPLICABLE MUST REMAIN WITHIN DIMENSIONS

DIMENSION STYLE: MM ONLY
SCALE: NTS
DESIGN UNITS: METRIC
THIRD ANGLE PROJECTION

DRAWN BY: YLQIAO DATE: 2005/03/14
CHECKED BY: PTLIM DATE: 2005/03/29
APPROVED BY: MLONG DATE: 2010/03/10
MATERIAL NO.: SEE TABLE
SIZE: A3

TITLE: CUSTOM HEADER 2.54MM PITCH SINGLE ROW SINGLE WAFER SMT HEADER
molex MOLEX INCORPORATED
DOCUMENT NO.: SD-87898-001
SHEET NO.: 13 OF 20

THIS DRAWING CONTAINS INFORMATION THAT IS PROPRIETARY TO MOLEX INCORPORATED AND SHOULD NOT BE USED WITHOUT WRITTEN PERMISSION

tb_frame_A3_P_AM_T
Rev. F 2009/06/18

Distributor of Molex Connector Corporation: Excellent Integrated System Limited
Datasheet of 0878980557 - 2.54MMSRSW SMT HDR W/CAP
Contact us: sales@integrated-circuit.com Website: www.integrated-circuit.com

| PACKAGING OPTION PART NO. | | | | | | CKT SIZE | VOID POSITION | PLATING TYPE | DIMENSION | | | | |
|---|---|---|---|---|---|---|---|---|---|---|---|---|---|
| TRAY WITHOUT CAP | TRAY WITH CAP | TUBE WITHOUT CAP | TUBE WITH CAP | TAPE & REEL WITHOUT CAP | TAPE & REEL WITH CAP | | | | A | B | G | F | M |
| ------- | ------- | 87898-3721 | 87898-3731 | ------- | ------- | 37 | ----- | 1 | 93.98 | 91.44 | 10.81 | 9.65 | 5.84 |
| ------- | ------- | 87898-3722 | 87898-3732 | ------- | ------- | 37 | ----- | 2 | 93.98 | 91.44 | 10.81 | 9.65 | 5.84 |
| ------- | ------- | 87898-3724 | 87898-3734 | ------- | ------- | 37 | ----- | 4 | 93.98 | 91.44 | 10.81 | 9.65 | 5.84 |
| ------- | ------- | 87898-3725 | 87898-3735 | ------- | ------- | 37 | ----- | 5 | 93.98 | 91.44 | 10.81 | 9.65 | 5.84 |
| ------- | ------- | 87898-3726 | 87898-3736 | ------- | ------- | 37 | ----- | 6 | 93.98 | 91.44 | 10.81 | 9.65 | 5.84 |
| | | | | | | | | | | | | | |
| | | | | | | | | | | | | | |
| ------- | ------- | 87898-3821 | 87898-3831 | ------- | ------- | 38 | ----- | 1 | 96.52 | 93.98 | 10.81 | 9.65 | 5.84 |
| ------- | ------- | 87898-3822 | 87898-3832 | ------- | ------- | 38 | ----- | 2 | 96.52 | 93.98 | 10.81 | 9.65 | 5.84 |
| ------- | ------- | 87898-3824 | 87898-3834 | ------- | ------- | 38 | ----- | 4 | 96.52 | 93.98 | 10.81 | 9.65 | 5.84 |
| ------- | ------- | 87898-3825 | 87898-3835 | ------- | ------- | 38 | ----- | 5 | 96.52 | 93.98 | 10.81 | 9.65 | 5.84 |
| ------- | ------- | 87898-3826 | 87898-3836 | ------- | ------- | 38 | ----- | 6 | 96.52 | 93.98 | 10.81 | 9.65 | 5.84 |
| | | | | | | | | | | | | | |
| | | | | | | | | | | | | | |
| ------- | ------- | 87898-3921 | 87898-3931 | ------- | ------- | 39 | ----- | 1 | 99.06 | 96.52 | 10.81 | 9.65 | 5.84 |
| ------- | ------- | 87898-3922 | 87898-3932 | ------- | ------- | 39 | ----- | 2 | 99.06 | 96.52 | 10.81 | 9.65 | 5.84 |
| ------- | ------- | 87898-3924 | 87898-3934 | ------- | ------- | 39 | ----- | 4 | 99.06 | 96.52 | 10.81 | 9.65 | 5.84 |
| ------- | ------- | 87898-3925 | 87898-3935 | ------- | ------- | 39 | ----- | 5 | 99.06 | 96.52 | 10.81 | 9.65 | 5.84 |
| ------- | ------- | 87898-3926 | 87898-3936 | ------- | ------- | 39 | ----- | 6 | 99.06 | 96.52 | 10.81 | 9.65 | 5.84 |

EWR#1228, +0209
EC NO: S2010-0966
DRWN:ATSEE 2010/05/20
CH'KD:PTLIM 2005/03/29
APPR:MLONG 2010/06/08
B3
REV
DESCRIPTION

QUALITY SYMBOLS
$F_A$=0
$F_C$=0
$F_P$=0

GENERAL TOLERANCES (UNLESS SPECIFIED)

| | mm | INCH |
|---|---|---|
| 4 PLACES | ± --- | ± --- |
| 3 PLACES | ± --- | ± --- |
| 2 PLACES | ± 0.2 | ± --- |
| 1 PLACE | ± --- | ± --- |

ANGULAR ± 3 °

DRAFT WHERE APPLICABLE MUST REMAIN WITHIN DIMENSIONS

DIMENSION STYLE: MM ONLY
SCALE: NTS
DESIGN UNITS: METRIC
THIRD ANGLE PROJECTION

DRAWN BY: YLQIAO DATE: 2005/03/14
CHECKED BY: PTLIM DATE: 2005/03/29
APPROVED BY: MLONG DATE: 2010/03/10
MATERIAL NO.: SEE TABLE
SIZE: A3

TITLE: CUSTOM HEADER 2.54MM PITCH SINGLE ROW SINGLE WAFER SMT HEADER
molex MOLEX INCORPORATED
DOCUMENT NO.: SD-87898-001
SHEET NO.: 14 OF 20

THIS DRAWING CONTAINS INFORMATION THAT IS PROPRIETARY TO MOLEX INCORPORATED AND SHOULD NOT BE USED WITHOUT WRITTEN PERMISSION

tb_frame_A3_P_AM_T
Rev. F 2009/06/18

| PACKAGING OPTION PART NO. | | | | | | CKT SIZE | VOID POSITION | PLATING TYPE | DIMENSION | | | | |
|---|---|---|---|---|---|---|---|---|---|---|---|---|---|
| TRAY WITHOUT CAP | TRAY WITH CAP | TUBE WITHOUT CAP | TUBE WITH CAP | TAPE & REEL WITHOUT CAP | TAPE & REEL WITH CAP | | | | A | B | G | F | M |
| ------- | ------- | 87898-4021 | 87898-4031 | ------- | ------- | 40 | ----- | 1 | 101.6 | 99.06 | 10.81 | 9.65 | 5.84 |
| ------- | ------- | 87898-4022 | 87898-4032 | ------- | ------- | 40 | ----- | 2 | 101.6 | 99.06 | 10.81 | 9.65 | 5.84 |
| ------- | ------- | 87898-4024 | 87898-4034 | ------- | ------- | 40 | ----- | 4 | 101.6 | 99.06 | 10.81 | 9.65 | 5.84 |
| ------- | ------- | 87898-4025 | 87898-4035 | ------- | ------- | 40 | ----- | 5 | 101.6 | 99.06 | 10.81 | 9.65 | 5.84 |
| ------- | ------- | 87898-4026 | 87898-4036 | ------- | ------- | 40 | ----- | 6 | 101.6 | 99.06 | 10.81 | 9.65 | 5.84 |

EWR#1228, +0209
EC NO: S2010-0966
DRWN:ATSEE 2010/05/20
CHKD:PTLIM 2005/03/29
APPR:MLONG 2010/06/08
DESCRIPTION
B3
REV

QUALITY SYMBOLS
=0
=0
=0

GENERAL TOLERANCES (UNLESS SPECIFIED)

| | mm | INCH |
|---|---|---|
| 4 PLACES | ± --- | ± --- |
| 3 PLACES | ± --- | ± --- |
| 2 PLACES | ± 0.2 | ± --- |
| 1 PLACE | ± --- | ± --- |
| ANGULAR ± 3 ° | | |

DRAFT WHERE APPLICABLE MUST REMAIN WITHIN DIMENSIONS

DIMENSION STYLE: MM ONLY
SCALE: NTS
DESIGN UNITS: METRIC
THIRD ANGLE PROJECTION

DRAWN BY: YLQIAO DATE: 2005/03/14
CHECKED BY: PTLIM DATE: 2005/03/29
APPROVED BY: MLONG DATE: 2010/03/10
MATERIAL NO.: SEE TABLE

TITLE: CUSTOM HEADER 2.54MM PITCH SINGLE ROW SINGLE WAFER SMT HEADER
MOLEX INCORPORATED
DOCUMENT NO.: SD-87898-001
SHEET NO.: 15 OF 20
SIZE: A3

THIS DRAWING CONTAINS INFORMATION THAT IS PROPRIETARY TO MOLEX INCORPORATED AND SHOULD NOT BE USED WITHOUT WRITTEN PERMISSION

tb_frame_A3_P_AM_T
Rev. F 2009/06/18

PART WITHOUT CAP
IN TUBE ORIENTATION

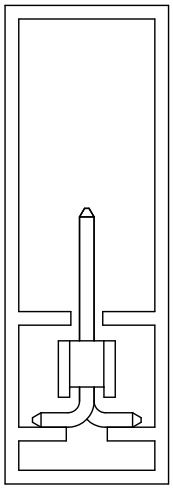

PART WITH CAP
IN TUBE ORIENTATION

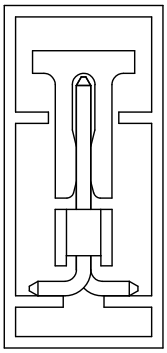

EWR#1228, +0209
EC NO: S2010-0966 2010/05/20
DRWN:AISEE 2005/03/29
CHKD:PTLIM
APPR:MLONG 2010/06/08
DESCRIPTION
B3
REV

QUALITY SYMBOLS
F/A=0
F/C=0
F/P=0

GENERAL TOLERANCES (UNLESS SPECIFIED)

| | mm | INCH |
|---|---|---|
| 4 PLACES | ± --- | ± --- |
| 3 PLACES | ± --- | ± --- |
| 2 PLACES | ± 0.2 | ± --- |
| 1 PLACE | ± --- | ± --- |
| ANGULAR ± 3 ° | | |

DRAFT WHERE APPLICABLE MUST REMAIN WITHIN DIMENSIONS

DIMENSION STYLE: MM ONLY
SCALE: NTS
DESIGN UNITS: METRIC
THIRD ANGLE PROJECTION

| | | |
|---|---|---|
| DRAWN BY | YLQIAO | DATE 2005/03/14 |
| CHECKED BY | PTLIM | DATE 2005/03/29 |
| APPROVED BY | MLONG | DATE 2010/03/10 |
| MATERIAL NO. | SEE TABLE | |

TITLE
CUSTOM HEADER
2.54MM PITCH SINGLE ROW
SINGLE WAFER SMT HEADER

molex MOLEX INCORPORATED

DOCUMENT NO. SD-87898-001
SHEET NO. 16 OF 20

SIZE A3

THIS DRAWING CONTAINS INFORMATION THAT IS PROPRIETARY TO MOLEX INCORPORATED AND SHOULD NOT BE USED WITHOUT WRITTEN PERMISSION

tb_frame_A3_P_AM_T
Rev. F 2009/06/18

| CKT | DIMENSION | | | | |
|---|---|---|---|---|---|
| | Bo | Ao | Ko | F | W |
| 2 | 8.02 | 5.20 | 13.60 | 11.50 | 24.00 |
| 4 | 10.55 | 5.20 | 11.30 | 11.50 | 24.00 |

## EMBOSSED CARRIER TYPE 'A'

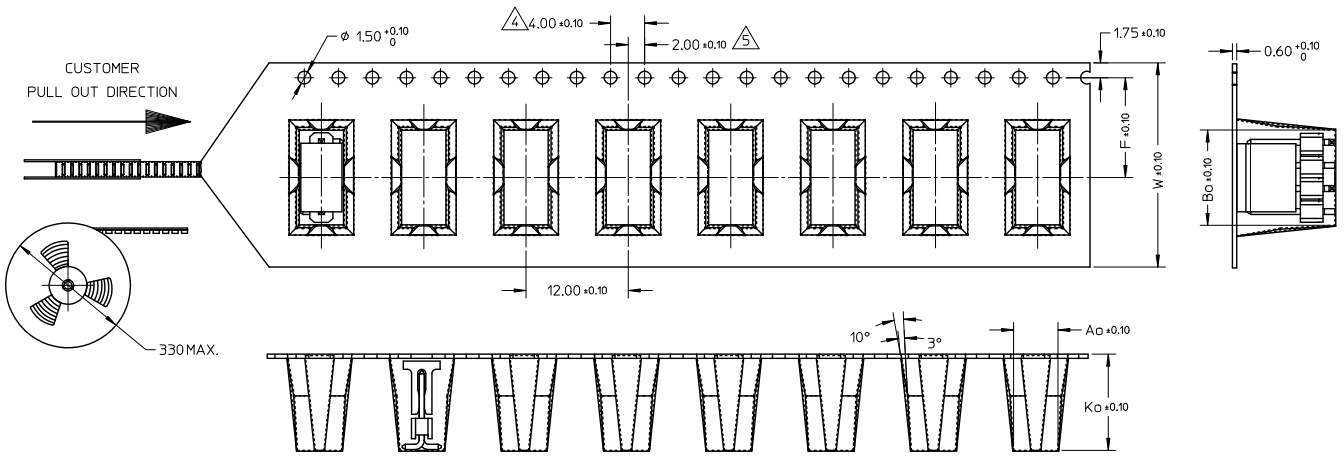


**PART PACK IN E/TAPE ORIENTATION (FOR REF USE)**

NOTES:

1. LEADER AND TRAILER TAPE

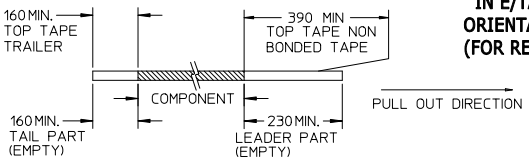


2. PEELING OFF FORCE OF THE TOP TAPE: 20 - 80gf.
   (PEELING DIRECTION AS SHOWN IN FOLLOWING FIGURE)

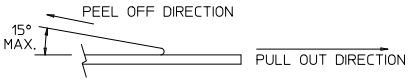


3. MATERIAL: BLACK P.S CONDUCTIVE, BLACK
4. MEASURED FROM CENTRELINE OF SPROCKET HOLE TO CENTRELINE OF SPOCKET
5. CUMULATIVE TOLERANCE OF 10 SPROCKET HOLE IS ±0.20mm
6. A0 AND B0 ARE MEASURE FROM ABOVE POCKET BASE 0.30mm
7. TAPE AND REEL SPECIFICATION IS AS PER EIA-481.
8. TAPE AND REEL QUANTITY : 440PCS/REEL
9. THE TAPE IS TREATED FOR ANTI-STATIC.
10. ALL RADIUS ARE 0.30MM UNLESS SPECIFY
11. SURFACE RESISTIVITY $10^3$ TO 10 OHMS.

| | | | |
|---|---|---|---|
| EWR#1228, +0209 | 2010/05/20 | DESCRIPTION | REV |
| EC NO: S2010-0966 | 2005/03/29 | | |
| DRWN:ATSEE | 2010/06/08 | | |
| CHKD:PTLIM | | | |
| APPR:MLONG | | | |
| B3 | | | |

QUALITY SYMBOLS: E_A=0, E_C=0, E_R=0

GENERAL TOLERANCES (UNLESS SPECIFIED)

| | mm | INCH |
|---|---|---|
| 4 PLACES | ± --- | ± --- |
| 3 PLACES | ± --- | ± --- |
| 2 PLACES | ± 0.2 | ± --- |
| 1 PLACE | ± --- | ± --- |
| ANGULAR ± 3 ° | | |

DRAFT WHERE APPLICABLE MUST REMAIN WITHIN DIMENSIONS

| | | | |
|---|---|---|---|
| DIMENSION STYLE: MM ONLY | | SCALE: NTS | DESIGN UNITS: METRIC |
| THIRD ANGLE PROJECTION | | | |
| DRAWN BY: YLQIAO | DATE: 2005/03/14 | TITLE: CUSTOM HEADER 2.54MM PITCH SINGLE ROW SINGLE WAFER SMT HEADER | |
| CHECKED BY: PTLIM | DATE: 2005/03/29 | | |
| APPROVED BY: MLONG | DATE: 2010/03/10 | molex MOLEX INCORPORATED | |
| MATERIAL NO.: SEE TABLE | | DOCUMENT NO.: SD-87898-001 | SHEET NO.: 17 OF 20 |
| SIZE: A3 | THIS DRAWING CONTAINS INFORMATION THAT IS PROPRIETARY TO MOLEX INCORPORATED AND SHOULD NOT BE USED WITHOUT WRITTEN PERMISSION | | |

tb_frame_A3_P_AM_T
Rev. F 2009/06/18

**Distributor of Molex Connector Corporation: Excellent Integrated System Limited**
Datasheet of 0878980557 - 2.54MMSRSW SMT HDR W/CAP
Contact us: sales@integrated-circuit.com Website: www.integrated-circuit.com

| CKT | DIMENSION | | | | |
|---|---|---|---|---|---|
| | Bo | Ao | Ko | F | W |
| 5 | 13.10 | 5.20 | 11.30 | 11.50 | 24.00 |

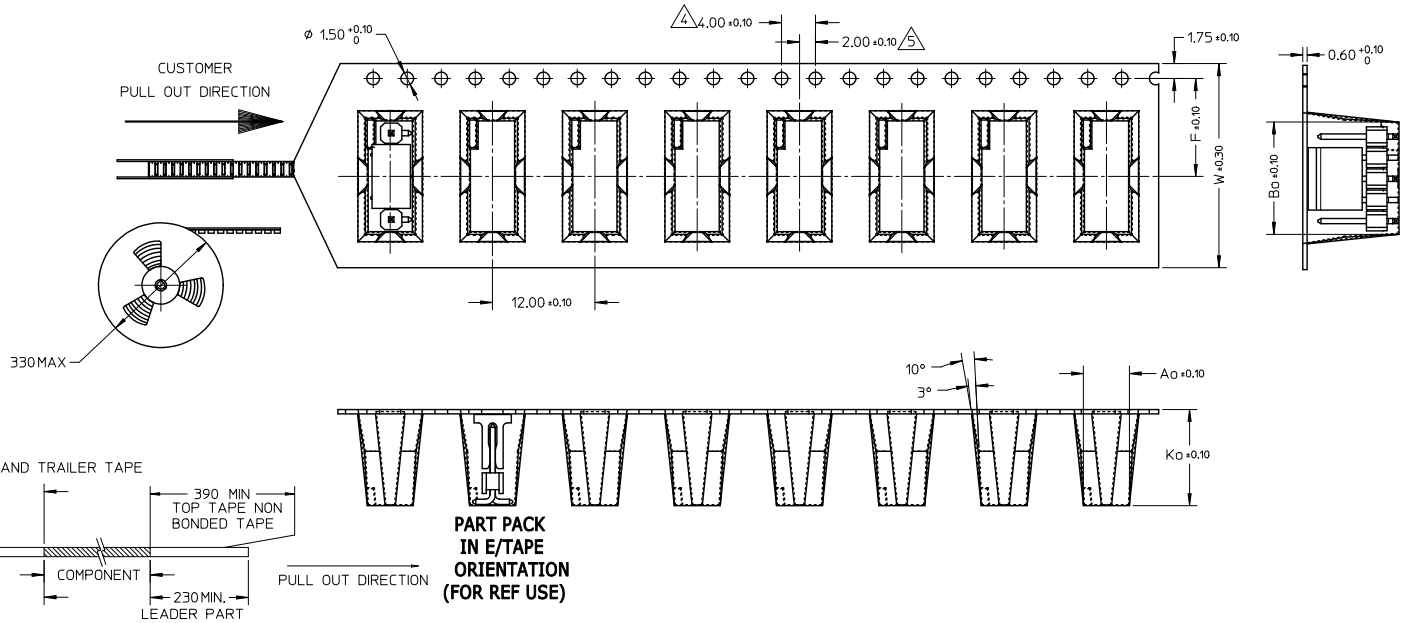


NOTES:

1. LEADER AND TRAILER TAPE

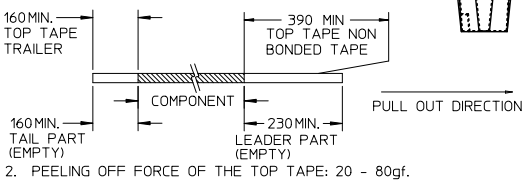


2. PEELING OFF FORCE OF THE TOP TAPE: 20 - 80gf.
(PEELING DIRECTION AS SHOWN IN FOLLOWING FIGURE)

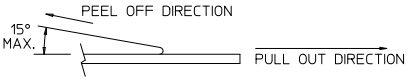


3. MATERIAL: BLACK P.S CONDUCTIVE, BLACK
4. MEASURED FROM CENTRELINE OF SPROCKET HOLE TO CENTRELINE OF SPOCKET
5. CUMULATIVE TOLERANCE OF 10 SPROCKET HOLE IS ±0.20mm
6. A0 AND B0 ARE MEASURE FROM ABOVE POCKET BASE 0.30mm
7. TAPE AND REEL SPECIFICATION IS AS PER EIA-481.
8. TAPE AND REEL QUANTITY : 440PCS/REEL
9. THE TAPE IS TREATED FOR ANTI-STATIC.
10. ALL RADIUS ARE 0.30MM UNLESS SPECIFY
11. SURFACE RESISTIVITY $10^3$ TO 10 OHMS.

| | | | |
|---|---|---|---|
| EWR#1228, +0209 | EC NO: S2010-0966 | DRWN:ATSEE | 2010/05/20 |
| | | CH'KD:PTLIM | 2005/03/29 |
| | | APPR:MLONG | 2010/06/08 |
| B3 | REV | DESCRIPTION | |

QUALITY SYMBOLS: $F_A$=0, $F_C$=0, $F_P$=0

GENERAL TOLERANCES (UNLESS SPECIFIED)

| | mm | INCH |
|---|---|---|
| 4 PLACES | ± --- | ± --- |
| 3 PLACES | ± --- | ± --- |
| 2 PLACES | ± 0.2 | ± --- |
| 1 PLACE | ± --- | ± --- |

ANGULAR ± 3 °

DRAFT WHERE APPLICABLE MUST REMAIN WITHIN DIMENSIONS

| | | | |
|---|---|---|---|
| DIMENSION STYLE: MM ONLY | | SCALE: NTS | DESIGN UNITS: METRIC |
| THIRD ANGLE PROJECTION | | | |
| DRAWN BY: YLQIAO | DATE: 2005/03/14 | TITLE: CUSTOM HEADER 2.54MM PITCH SINGLE ROW SINGLE WAFER SMT HEADER | |
| CHECKED BY: PTLIM | DATE: 2005/03/29 | | |
| APPROVED BY: MLONG | DATE: 2010/03/10 | molex MOLEX INCORPORATED | |
| MATERIAL NO.: SEE TABLE | | DOCUMENT NO.: SD-87898-001 | SHEET NO.: 18 OF 20 |
| SIZE: A3 | | | |

THIS DRAWING CONTAINS INFORMATION THAT IS PROPRIETARY TO MOLEX INCORPORATED AND SHOULD NOT BE USED WITHOUT WRITTEN PERMISSION

tb_frame_A3_P_AM_T
Rev. F 2009/06/18

Distributor of Molex Connector Corporation: Excellent Integrated System Limited
Datasheet of 0878980557 - 2.54MMSRSW SMT HDR W/CAP
Contact us: sales@integrated-circuit.com Website: www.integrated-circuit.com

| CKT | DIMENSION | | | | | |
|---|---|---|---|---|---|---|
| | Bo | So | Ao | Ko | F | W |
| 6 | 15.65 | 28.40 | 5.20 | 11.30 | 14.20 | 32.00 |
| 8 | 20.70 | 40.40 | 5.20 | 11.30 | 20.20 | 44.00 |
| 10 | 25.80 | 40.40 | 5.20 | 11.30 | 20.20 | 44.00 |
| 12 | 30.90 | 52.40 | 5.20 | 11.30 | 26.20 | 56.00 |
| 14 | 35.95 | 52.40 | 5.20 | 11.30 | 26.20 | 56.00 |
| 16 | 41.05 | 52.40 | 5.20 | 11.30 | 26.20 | 56.00 |
| 18 | 46.20 | 68.40 | 5.20 | 11.30 | 34.20 | 72.00 |
| 20 | 51.20 | 68.40 | 5.20 | 11.30 | 34.20 | 72.00 |

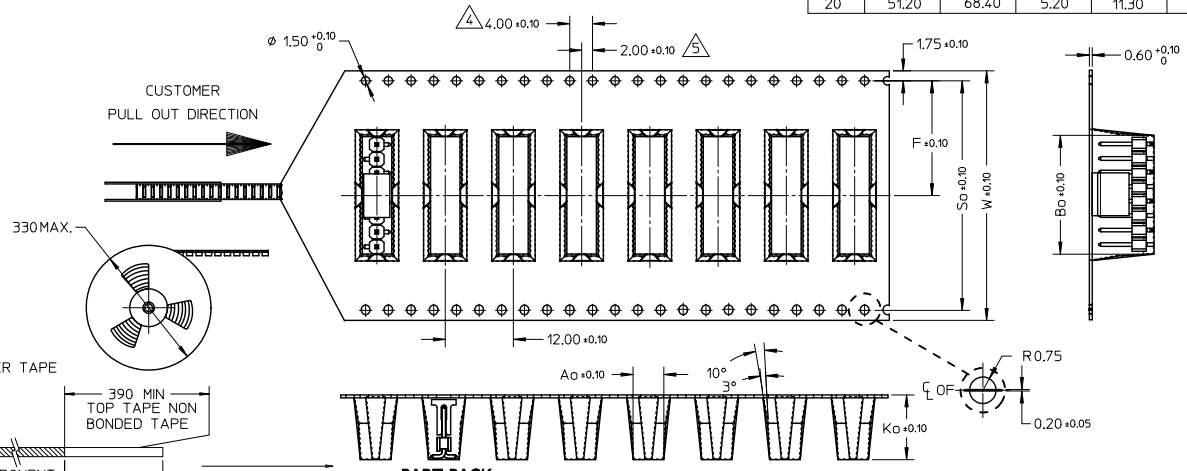


PART PACK
IN E/TAPE
ORIENTATION
(FOR REF USE)

NOTES:

1. LEADER AND TRAILER TAPE

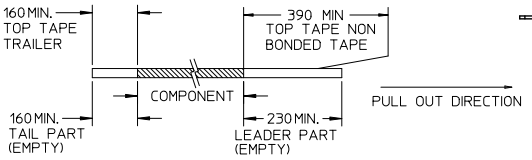


2. PEELING OFF FORCE OF THE TOP TAPE: 20 - 80gf.
(PEELING DIRECTION AS SHOWN IN FOLLOWING FIGURE)

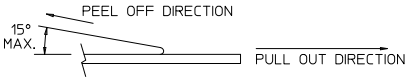


3. MATERIAL: BLACK P.S CONDUCTIVE, BLACK
4. MEASURED FROM CENTRELINE OF SPROCKET HOLE TO CENTRELINE OF SPOCKET
5. CUMULATIVE TOLERANCE OF 10 SPROCKET HOLE IS ±0.20mm
6. A0 AND B0 ARE MEASURE FROM ABOVE POCKET BASE 0.30mm
7. TAPE AND REEL SPECIFICATION IS AS PER EIA-481.
8. TAPE AND REEL QUANTITY : 440PCS/REEL
9. THE TAPE IS TREATED FOR ANTI-STATIC.
10. ALL RADIUS ARE 0.30MM UNLESS SPECIFY
11. SURFACE RESISTIVITY $10^3$ TO 10 OHMS.

EWR#1228, +0209
EC NO: S2010-0966
DRWN:ATSEE 2010/05/20
CHKD:PTLIM 2005/03/29
APPR:MLONG 2010/06/08
B3
REV
DESCRIPTION

QUALITY SYMBOLS
$F_A$=0
$F_C$=0
$F_P$=0

GENERAL TOLERANCES (UNLESS SPECIFIED)

| | mm | INCH |
|---|---|---|
| 4 PLACES | ± --- | ± --- |
| 3 PLACES | ± --- | ± --- |
| 2 PLACES | ± 0.2 | ± --- |
| 1 PLACE | ± --- | ± --- |

ANGULAR ± 3 °

DRAFT WHERE APPLICABLE MUST REMAIN WITHIN DIMENSIONS

DIMENSION STYLE: MM ONLY
SCALE: NTS
DESIGN UNITS: METRIC
THIRD ANGLE PROJECTION

| | | |
|---|---|---|
| DRAWN BY | YLQIAO | DATE 2005/03/14 |
| CHECKED BY | PTLIM | DATE 2005/03/29 |
| APPROVED BY | MLONG | DATE 2010/03/10 |

TITLE: CUSTOM HEADER 2.54MM PITCH SINGLE ROW SINGLE WAFER SMT HEADER

molex MOLEX INCORPORATED

MATERIAL NO.: SEE TABLE
DOCUMENT NO.: SD-87898-001
SHEET NO.: 19 OF 20
SIZE: A3

THIS DRAWING CONTAINS INFORMATION THAT IS PROPRIETARY TO MOLEX INCORPORATED AND SHOULD NOT BE USED WITHOUT WRITTEN PERMISSION

tb_frame_A3_P_AM_T
Rev. F 2009/06/18

| CKT | DIMENSION | | | | | |
|---|---|---|---|---|---|---|
| | Bo | So | Ao | Ko | F | W |
| 7 | 18.20 | 40.40 | 5.20 | 11.30 | 20.20 | 44.00 |
| 9 | 23.25 | 40.40 | 5.20 | 11.30 | 20.20 | 44.00 |
| 11 | 28.35 | 40.40 | 5.20 | 11.30 | 20.20 | 44.00 |
| 13 | 33.40 | 52.40 | 5.20 | 11.30 | 26.20 | 56.00 |
| 15 | 38.50 | 52.40 | 5.20 | 11.30 | 26.20 | 56.00 |
| 17 | 43.60 | 68.40 | 5.20 | 11.30 | 34.20 | 72.00 |
| 19 | 48.70 | 68.40 | 5.20 | 11.30 | 34.20 | 72.00 |
| 21 | 53.80 | 68.40 | 5.20 | 11.30 | 34.20 | 72.00 |

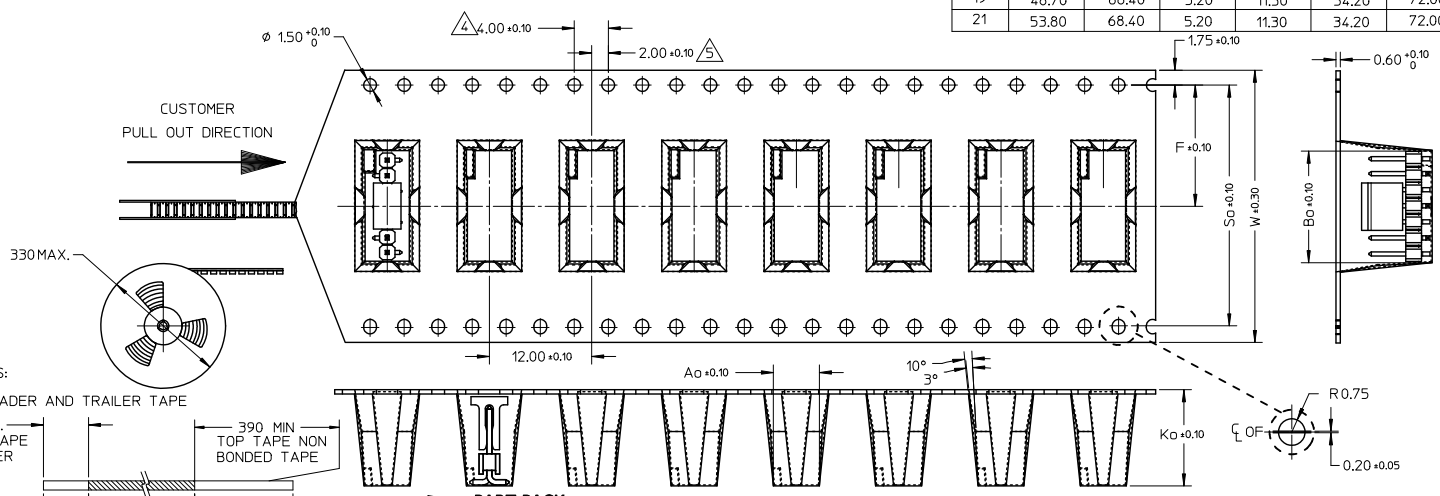


NOTES:

1. LEADER AND TRAILER TAPE

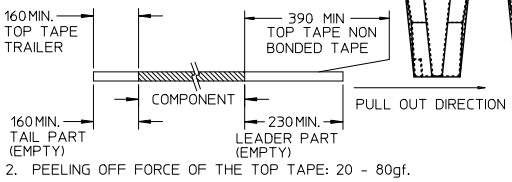


**PART PACK IN E/TAPE ORIENTATION (FOR REF USE)**

2. PEELING OFF FORCE OF THE TOP TAPE: 20 - 80gf.
(PEELING DIRECTION AS SHOWN IN FOLLOWING FIGURE)

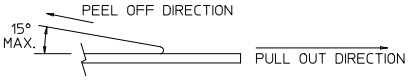


3. MATERIAL: BLACK P.S CONDUCTIVE, BLACK
4. MEASURED FROM CENTRELINE OF SPROCKET HOLE TO CENTRELINE OF SPOCKET
5. CUMULATIVE TOLERANCE OF 10 SPROCKET HOLE IS ±0.20mm
6. A0 AND B0 ARE MEASURE FROM ABOVE POCKET BASE 0.30mm
7. TAPE AND REEL SPECIFICATION IS AS PER EIA-481.
8. TAPE AND REEL QUANTITY : 440PCS/REEL
9. THE TAPE IS TREATED FOR ANTI-STATIC.
10. ALL RADIUS ARE 0.30MM UNLESS SPECIFY
11. SURFACE RESISTIVITY $10^3$ TO 10 OHMS.

EWR#1228, +0209
EC NO: S2010-0966
DRWN:AISEE 2010/05/20
CH'KD:PTLIM 2005/03/29
APPR:MLONG 2010/06/08
DESCRIPTION
B3
REV

QUALITY SYMBOLS
$F_A$=0
$F_C$=0
$F_P$=0

| GENERAL TOLERANCES (UNLESS SPECIFIED) | mm | INCH |
|---|---|---|
| 4 PLACES | ± --- | ± --- |
| 3 PLACES | ± --- | ± --- |
| 2 PLACES | ± 0.2 | ± --- |
| 1 PLACE | ± --- | ± --- |
| ANGULAR ± 3 ° | | |

DRAFT WHERE APPLICABLE MUST REMAIN WITHIN DIMENSIONS

DIMENSION STYLE: MM ONLY
SCALE: NTS
DESIGN UNITS: METRIC
THIRD ANGLE PROJECTION

| | | |
|---|---|---|
| DRAWN BY | YLQIAO | DATE 2005/03/14 |
| CHECKED BY | PTLIM | DATE 2005/03/29 |
| APPROVED BY | MLONG | DATE 2010/03/10 |
| MATERIAL NO. | SEE TABLE | |

TITLE: CUSTOM HEADER 2.54MM PITCH SINGLE ROW SINGLE WAFER SMT HEADER

molex MOLEX INCORPORATED

DOCUMENT NO. SD-87898-001
SHEET NO. 20 OF 20
SIZE A3

THIS DRAWING CONTAINS INFORMATION THAT IS PROPRIETARY TO MOLEX INCORPORATED AND SHOULD NOT BE USED WITHOUT WRITTEN PERMISSION

tb_frame_A3_P_AM_T
Rev. F 2009/06/18