Excellent Integrated System Limited

Stocking Distributor

Click to view price, real time Inventory, Delivery & Lifecycle Information:

Molex Connector Corporation
0387701102

For any questions, you can email us directly:
sales@integrated-circuit.com

38770

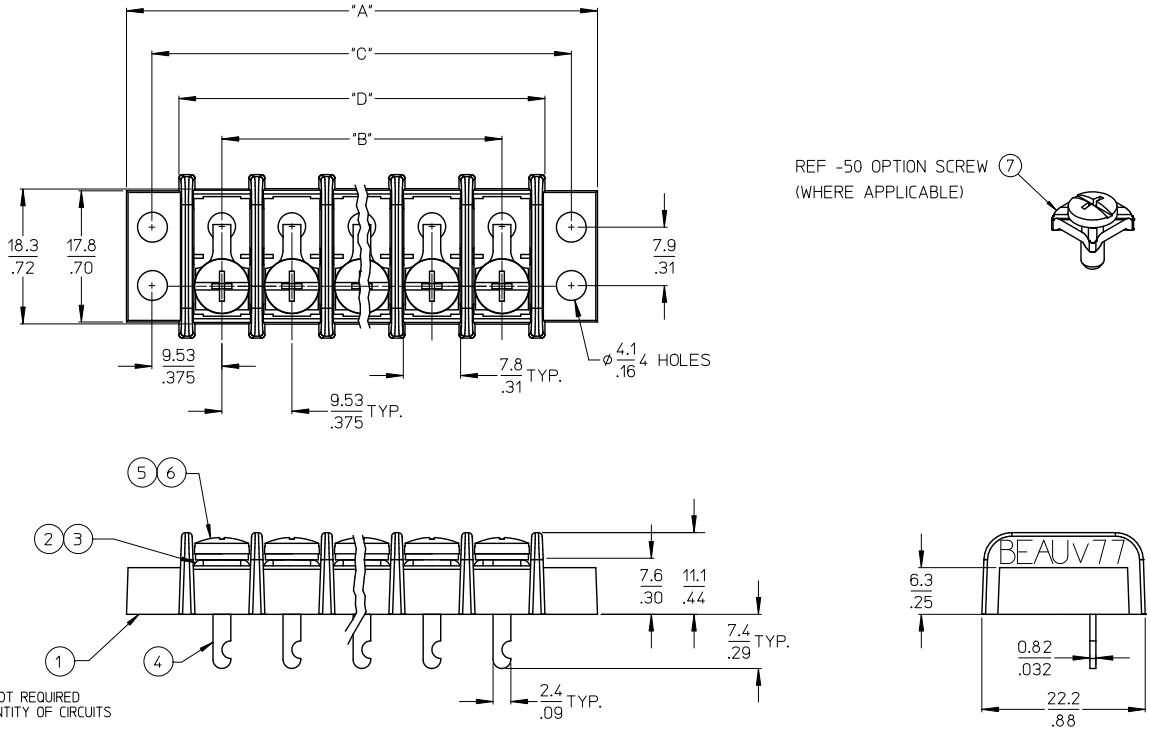

NOTES:
1. MATERIAL: SEE TABLE
2. FINISHES: SEE TABLE
3. PRODUCT SPECIFICATION: NOT REQUIRED
4. "XX" REFERS TO THE QUANTITY OF CIRCUITS
5. ROHS COMPLIANT

ITEM	QTY	DESCRIPTION	MATERIAL	FINISH
7	XX	SCREW, #6-32X.250 PAN HD, PHIL-SLOT W/WSHR (-50 OPT)	STEEL	ZN, CLEAR CHROMATE
6	XX	SCREW, #6-32X.250 BGHD, PHIL-SLOT (-49 OPT)	BRASS	NICKEL PLATE
5	XX	SCREW, #6-32X.250, BGHD PHIL-SLOT (STANDARD)	STEEL	ZN, CLEAR CHROMATE
4	XX	TERMINAL, SOLDER Y	BRASS	TIN PLATE
3	XX	TERMINAL PLATE (-49 OPT)	BRASS	TIN PLATE
2	XX	TERMINAL PLATE	BRASS	NICKEL PLATE
1	1	INSULATOR	POLYESTER (PBT)	BLACK

RELEASED
EC NO: WNA2012-0134
DRWN: JENCINAS 2011/08/18
CH'KD: JMACNEIL 2011/08/18
APPR: JMACNEIL 2011/10/17
REV A
DESCRIPTION

QUALITY SYMBOLS
▼=0
C=0

GENERAL TOLERANCES (UNLESS SPECIFIED)

	mm	INCH
4 PLACES	± ---	± ---
3 PLACES	± ---	± .005
2 PLACES	± 0.13	± .010
1 PLACE	± 0.3	± ---

ANGULAR ± 2 °

DRAFT WHERE APPLICABLE MUST REMAIN WITHIN DIMENSIONS

DIMENSION STYLE: MM/IN
SCALE: 2:1
DESIGN UNITS: INCH
THIRD ANGLE PROJECTION

DRAWN BY: JENCINAS DATE: 2011/08/18
CHECKED BY: JMACNEIL DATE: 2011/08/18
APPROVED BY: JMACNEIL DATE: 2011/10/17

TITLE: 9.53MM [.375] DOUBLE ROW LOW PROFILE BTS ASSY

molex MOLEX INCORPORATED

MATERIAL NO.: SEE CHART
DOCUMENT NO.: SD-38770-005
SHEET NO.: 1 OF 2
SIZE: B

THIS DRAWING CONTAINS INFORMATION THAT IS PROPRIETARY TO MOLEX INCORPORATED AND SHOULD NOT BE USED WITHOUT WRITTEN PERMISSION

tb_frame_B_P_ME_T
Rev. D 2004/04/02

38770

NO. OF CIRCUITS "XX"	DIM. "A"		DIM. "B"		DIM. "C"		DIM. "D"		ASSEMBLY MATERIAL NO. (STANDARD)	ASSEMBLY MATERIAL NO. (-49 OPTION)	ASSEMBLY MATERIAL NO. (-50 OPTION)
2	35.7	[1.41]	9.53	[.375]	28.6	[1.13]	21.3	[.84]	387701102	387701202	387702602
3	45.2	[1.78]	19.05	[.750]	38.1	[1.50]	30.8	[1.21]	387701103	387701203	387702603
4	54.7	[2.16]	28.58	[1.125]	47.6	[1.88]	40.3	[1.59]	387701104	387701204	387702604
5	64.3	[2.53]	38.10	[1.500]	57.2	[2.25]	49.8	[1.96]	387701105	387701205	387702605
6	73.8	[2.91]	47.63	[1.875]	66.7	[2.63]	59.4	[2.34]	387701106	387701206	387702606
7	83.3	[3.28]	57.15	[2.250]	76.2	[3.00]	68.9	[2.71]	387701107	387701207	387702607
8	92.8	[3.66]	66.68	[2.625]	85.7	[3.38]	78.4	[3.09]	387701108	387701208	387702608
9	102.4	[4.03]	76.20	[3.000]	95.3	[3.75]	87.9	[3.46]	387701109	387701209	387702609
10	111.9	[4.41]	85.73	[3.375]	104.8	[4.13]	97.5	[3.84]	387701110	387701210	387702610
11	121.4	[4.78]	95.25	[3.750]	114.3	[4.50]	107.0	[4.21]	387701111	387701211	387702611
12	130.9	[5.16]	104.78	[4.125]	123.8	[4.88]	116.5	[4.59]	387701112	387701212	387702612
13	140.5	[5.53]	114.30	[4.500]	133.4	[5.25]	126.0	[4.96]	387701113	387701213	387702613
14	150.0	[5.91]	123.83	[4.875]	142.9	[5.63]	135.6	[5.34]	387701114	387701214	387702614
15	159.5	[6.28]	133.35	[5.250]	152.4	[6.00]	145.1	[5.71]	387701115	387701215	387702615
16	169.0	[6.66]	142.88	[5.625]	161.9	[6.38]	154.6	[6.09]	387701116	387701216	387702616
17	178.6	[7.03]	152.40	[6.000]	171.5	[6.75]	164.1	[6.46]	387701117	387701217	387702617
18	188.1	[7.41]	161.93	[6.375]	181.0	[7.13]	173.7	[6.84]	387701118	387701218	387702618
19	197.6	[7.78]	171.45	[6.750]	190.5	[7.50]	183.2	[7.21]	387701119	387701219	387702619
20	207.1	[8.16]	180.98	[7.125]	200.0	[7.88]	192.7	[7.59]	387701120	387701220	387702620
21	216.7	[8.53]	190.50	[7.500]	209.6	[8.25]	202.2	[7.96]	387701121	387701221	387702621
22	226.2	[8.91]	200.03	[7.875]	219.1	[8.63]	211.8	[8.34]	387701122	387701222	387702622
23	235.7	[9.28]	209.55	[8.250]	228.6	[9.00]	221.3	[8.71]	387701123	387701223	387702623
24	245.2	[9.66]	219.08	[8.625]	238.1	[9.38]	230.8	[9.09]	387701124	387701224	387702624
25	254.8	[10.03]	228.60	[9.000]	247.7	[9.75]	240.3	[9.46]	387701125	387701225	387702625
26	264.3	[10.41]	238.13	[9.375]	257.2	[10.13]	249.9	[9.84]	387701126	387701226	387702626
27	273.8	[10.78]	247.65	[9.750]	266.7	[10.50]	259.4	[10.21]	387701127	387701227	387702627
28	283.3	[11.16]	257.18	[10.125]	276.2	[10.88]	268.9	[10.59]	387701128	387701228	387702628
29	292.9	[11.53]	266.70	[10.500]	285.8	[11.25]	278.4	[10.96]	387701129	387701229	387702629
30	302.4	[11.91]	276.23	[10.875]	295.3	[11.63]	288.0	[11.34]	387701130	387701230	387702630

SEE SHEET 1
EC NO: WNA2012-0134
DRWN: JENCINAS 2011/08/18
CHKD: JMACNEIL 2011/08/18
APPR: JMACNEIL 2011/10/17
DESCRIPTION
A
REV

QUALITY SYMBOLS
▼=0
Ⓒ=0

GENERAL TOLERANCES (UNLESS SPECIFIED)

	mm	INCH
4 PLACES	± ---	± ---
3 PLACES	± ---	± .005
2 PLACES	± 0.13	± .010
1 PLACE	± 0.3	± ---
ANGULAR ± 2 °		

DRAFT WHERE APPLICABLE MUST REMAIN WITHIN DIMENSIONS

DIMENSION STYLE: MM/IN
SCALE: 2:1
DESIGN UNITS: INCH
THIRD ANGLE PROJECTION

DRAWN BY: JENCINAS DATE: 2011/08/18
CHECKED BY: JMACNEIL DATE: 2011/08/18
APPROVED BY: JMACNEIL DATE: 2011/10/17

TITLE: 9.53MM [.375] DOUBLE ROW LOW PROFILE BTS ASSY

molex MOLEX INCORPORATED

MATERIAL NO.: SEE CHART
DOCUMENT NO.: SD-38770-005
SHEET NO.: 2 OF 2
SIZE: B

THIS DRAWING CONTAINS INFORMATION THAT IS PROPRIETARY TO MOLEX INCORPORATED AND SHOULD NOT BE USED WITHOUT WRITTEN PERMISSION

tb_frame_B_P_ME_T
Rev. D 2004/04/02