Excellent Integrated System Limited

Stocking Distributor

Click to view price, real time Inventory, Delivery & Lifecycle Information:

Molex Connector Corporation
0943285001

For any questions, you can email us directly:
sales@integrated-circuit.com

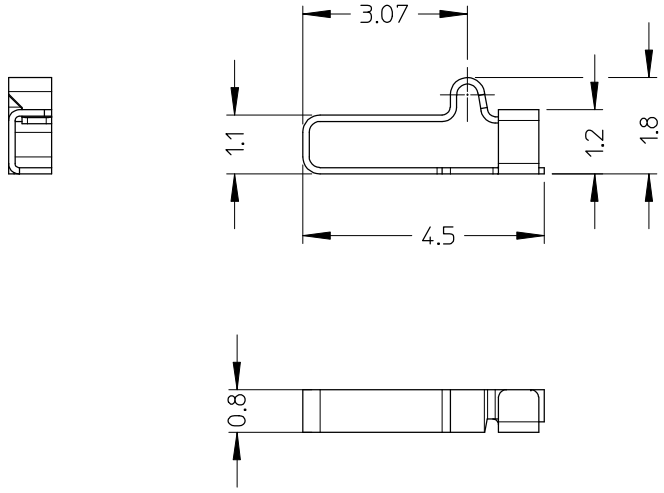

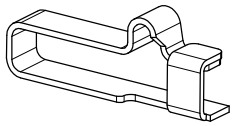

NOTES:
1. MATERIAL: BERYLLIUM COPPER 0.127 mm THICK.
0.07 µm MIN. Au OVER 1.27 µm MIN. Ni
2. CONTACT NORMAL FORCES @0.4 mm
DEFLECTION 0.30 N ±0.15 N

3. PACKAGING: T&R 8000 PCS/REEL,
8 REEL/BOX (SPQ=64000 PCS)

Std.Descr.:"MICRO SPRING CONTACT"

ENTER DESCRIPTION EC NO: Z2008-0143 DRWN:FGOTTARD 2008/03/17 CH'KD:LSANTESSO 2008/03/17 APPR:GZUIN 2008/03/18 DESCRIPTION A REV	QUALITY SYMBOLS ▼=0 ▽C=0	GENERAL TOLERANCES (UNLESS SPECIFIED) mm / INCH 4 PLACES ± --- / ± --- 3 PLACES ± --- / ± --- 2 PLACES ± 0.10 / ± --- 1 PLACE ± 0.15 / ± --- ANGULAR ±---° DRAFT WHERE APPLICABLE MUST REMAIN WITHIN DIMENSIONS	DIMENSION STYLE: MM ONLY DRAWN BY: FGOTTARDO DATE: 2008/14/03 CHECKED BY: RSANDANO DATE: 2008/14/03 APPROVED BY: GZUIN DATE: 2008/14/03 MATERIAL NO.: 94328-5001 SIZE: A4	SCALE: 10:1 DESIGN UNITS: METRIC FIRST ANGLE PROJECTION TITLE: MICRO SPRING CONTACT molex MOLEX INCORPORATED DOCUMENT NO.: SD-94328-001 SHEET NO.: 1 OF 1	THIS DRAWING CONTAINS INFORMATION THAT IS PROPRIETARY TO MOLEX INCORPORATED AND SHOULD NOT BE USED WITHOUT WRITTEN PERMISSION

tb_frame_A4_P_AM_F
Rev. E 2006/04/15