Excellent Integrated System Limited

Stocking Distributor

Click to view price, real time Inventory, Delivery & Lifecycle Information:

Molex Connector Corporation
0598110000

For any questions, you can email us directly:
sales@integrated-circuit.com

Distributor of Molex Connector Corporation: Excellent Integrated System Limited
Datasheet of 0598110000 - SCREW LOCK
Contact us: sales@integrated-circuit.com Website: www.integrated-circuit.com

DWG. NO. SD-59811-0000

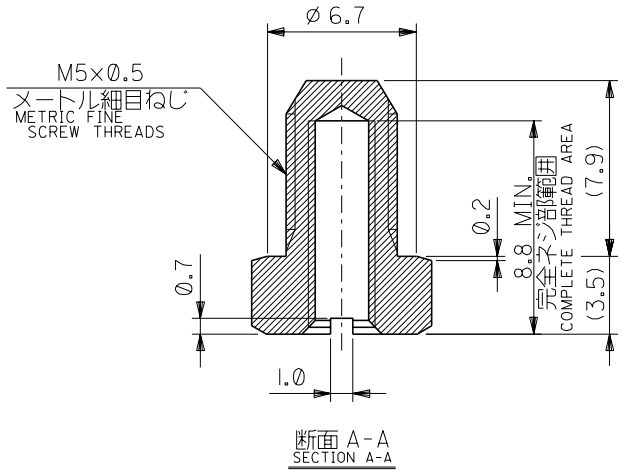

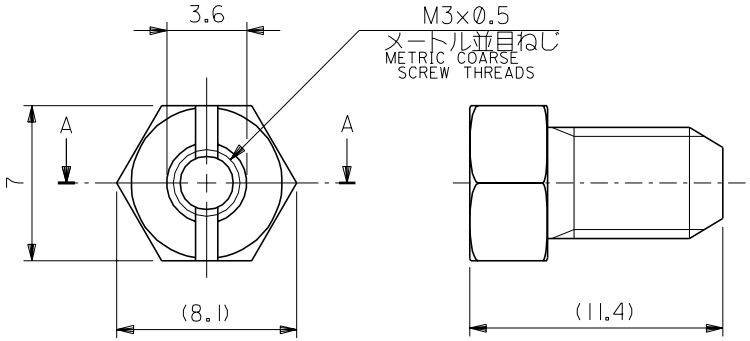

角度 ANGLE	±3°
30 以上 OVER	±0.3
10 以上 OVER 30 未満 UNDER	±0.25
10 未満 UNDER	±0.2
一般公差 GENERAL TOLERANCES	

LTR	REVISION RECORD	DR. / CHK.	DATE
A	変更 REVISED (JD00104)	T.O / S.I	'99/7/26
0	新規作成 RELEASED (JD60017)	N.M / M.S	'95/7/5

材料 MATERIAL	SUS303
仕上げ FINISH	〃
適用電線範囲 WIRE RANGE	〃
被覆外径 INS. RANGE	〃
DRAWN BY '95/7/5	M. Matsumura
CHK'D BY	H. Sasao
APP'D BY	M. Hasegawa
尺度 SCALE	4-1

molex MOLEX-JAPAN CO.,LTD. 日本モレックス株式会社

REVISE ONLY ON CAD SYSTEM

TITLE 名称: SCREW LOCK

DWG. NO. SD-59811-0000 REV A

DIMENSIONS IN METRIC DO NOT SCALE DRAWING : MM

THIS DRAWING CONTAINS INFORMATION THAT IS PROPRIETARY TO MOLEX(JAPAN) AND SHOULD NOT BE USED WITHOUT WRITTEN PERMISSION
本図面は日本モレックス（株）の所有する情報を含むもので 当社の許可なく複製を禁止する。

EN-0IC(032)MX.1-33

ZF3:110,032SS59811.DGN