Excellent Integrated System Limited

Stocking Distributor

Click to view price, real time Inventory, Delivery & Lifecycle Information:

Phoenix Contact
2967112

For any questions, you can email us directly:
sales@integrated-circuit.com

Extract from the online catalog

PLC-RSC- 24UC/21-21AU

Order No.: 2967112

The illustration shows the version PLC-RSC- 24DC/21-21

http://eshop.phoenixcontact.de/phoenix/treeViewClick.do?UID=2967112

PLC relay, consisting of base terminal block PLC-BSC.../21 with screw connection and pluggable miniature relay with multi-layer contact, for assembly on DIN rail NS 35/7.5, 2 PDT, input voltage 24 V AC/DC

Commercial data	
EAN	4017918156411
Pack	10 pcs.
Customs tariff	85364190
Weight/Piece	0.06824 KG
Catalog page information	Page 77 (IF-2009)

Product notes

WEEE/RoHS-compliant since: 05/29/2006

http://www.download.phoenixcontact.com Please note that the data given here has been taken from the online catalog. For comprehensive information and data, please refer to the user documentation. The General Terms and Conditions of Use apply to Internet downloads.

Technical data

Coil side	
Nominal input voltage U_N	24 V AC/DC
Nominal input current at U_{IN}	17.5 mA (at U_N = 24 V AC)
	17.5 mA (at U_N = 24 V DC)

PLC-RSC- 24UC/21-21AU Order No.: 2967112
http://eshop.phoenixcontact.de/phoenix/treeViewClick.do?UID=2967112

Typical response time	8 ms
Typical release time	10 ms
Operating voltage display	Yellow LED
Name of protection	Bridge rectifier
Protective circuit/component	Bridge rectifier

Contact side

Contact type	Single contact, 2-PDT
Contact material	AgNi, hard gold-plated
Maximum switching voltage	30 V AC
	36 V DC
Minimum switching voltage	100 mV
Maximum inrush current	50 mA
Min. switching current	1 mA
Limiting continuous current	50 mA
Interrupting rating (ohmic load) max.	1.2 W (for 24 V DC)
Note	**the following values are applicable if a gold layer is destroyed**
Maximum switching voltage	250 V AC/DC
Minimum switching voltage	5 V AC/DC
Limiting continuous current	6 A
Maximum inrush current	15 A (300 ms)
Min. switching current	10 mA
Interrupting rating (ohmic load) max.	140 W (for 24 V DC)
	85 W (for 48 V DC)
	60 W (for 60 V DC)
	44 W (for 110 V DC)
	60 W (for 220 V DC)
	1500 VA (for 250 V AC)

General data

Width	14 mm
Height	94 mm
Depth	80 mm
Test voltage relay winding/relay contact	4 kV AC (50 Hz, 1 min)
Test voltage PDT/PDT	2.5 kV AC (50 Hz, 1 min)
Ambient temperature (operation)	-25 °C ... 60 °C

PLC-RSC- 24UC/21-21AU Order No.: 2967112
http://eshop.phoenixcontact.de/phoenix/treeViewClick.do?UID=2967112

Ambient temperature (storage/transport)	-40 °C ... 85 °C
Operating mode	100% operating factor
Service life mechanical	3 x 10^7 cycles
Inflammability class in acc. with UL 94 (housing)	V0
Standard designation	Standards/regulations
Standards/regulations	DIN EN 50178/DIN VDE 0160 (in relevant parts)
	DIN EN 61810 (in relevant parts)
Pollution degree	2
Surge voltage category	III
Mounting position	Any
Assembly instructions	In rows with zero spacing

Connection data

Type of connection	Screw connection
Conductor cross section solid min.	0.14 mm²
Conductor cross section solid max.	2.5 mm²
Conductor cross section stranded min.	0.14 mm²
Conductor cross section stranded max.	2.5 mm²
Conductor cross section AWG/kcmil min.	26
Conductor cross section AWG/kcmil max	14
Stripping length	8 mm
Screw thread	M3

Certificates / Approvals

Certification	CUL, CUL Listed, GL, GOST, UL, UL Listed

Accessories

Item	Designation	Description
Assembly		
0801762	NS 35/ 7,5 CU UNPERF 2000MM	DIN rail, material: Copper, unperforated, height 7.5 mm, width 35 mm, length: 2 m
0801733	NS 35/ 7,5 PERF 2000MM	DIN rail, material: Steel, galvanized and passivated with a thick layer, perforated, height 7.5 mm, width 35 mm, length: 2 m

PLC-RSC- 24UC/21-21AU Order No.: 2967112
http://eshop.phoenixcontact.de/phoenix/treeViewClick.do?UID=2967112

0801681	NS 35/ 7,5 UNPERF 2000MM	DIN rail, material: Steel, unperforated, height 7.5 mm, width 35 mm, length: 2 m
0801377	NS 35/ 7,5 V2A UNPERF 2000MM	DIN rail, Width: 35 mm, Height: 7.5 mm, Length: 2000 mm, Color: silver
1201756	NS 35/15 AL UNPERF 2000MM	DIN rail, deep-drawn, high profile, unperforated, 1.5 mm thick, material: Aluminum, height 15 mm, width 35 mm, length 2 m
1201895	NS 35/15 CU UNPERF 2000MM	DIN rail, material: Copper, unperforated, 1.5 mm thick, height 15 mm, width 35 mm, length: 2 m
1201730	NS 35/15 PERF 2000MM	DIN rail, material: Steel, perforated, height 15 mm, width 35 mm, length: 2 m
1201714	NS 35/15 UNPERF 2000MM	DIN rail, material: Steel, unperforated, height 15 mm, width 35 mm, length: 2 m
1201798	NS 35/15-2,3 UNPERF 2000MM	DIN rail, material: Steel, unperforated, 2.3 mm thick, height 15 mm, width 35 mm, length: 2 m
2966841	PLC-ATP BK	Separating plate, 2 mm thick, required at the start and end of a PLC terminal strip. Furthermore, it is used for: visual separation of groups, safe isolation of different voltages of neighboring PLC relays in acc. with DIN VDE 0106-101, isolation

Bridges

2966812	FBST 6-PLC BU	Single plug-in bridge, Length: 6 mm, Number of positions: 2, Color: blue
2966825	FBST 6-PLC GY	Single plug-in bridge, Length: 6 mm, Number of positions: 2, Color: gray
2966236	FBST 6-PLC RD	Single plug-in bridge, Length: 6 mm, Number of positions: 2, Color: red
2967688	FBST 8-PLC GY	Single plug-in bridge, Length: 8 mm, Number of positions: 2, Color: gray
2967691	FBST 14-PLC BK	Single plug-in bridge, Length: 14 mm, Number of positions: 2, Color: black
2966692	FBST 500-PLC BU	Continuous plug-in bridge, Length: 500 mm, Color: blue
2966838	FBST 500-PLC GY	Continuous plug-in bridge, Length: 500 mm, Color: gray
2966786	FBST 500-PLC RD	Continuous plug-in bridge, Length: 500 mm, Color: red

General

2966508	PLC-ESK GY	Power terminal block, for the input of up to four potentials, for mounting on NS 35/7.5

Marking

1053001	ZB 10:UNBEDRUCKT	Zack strip, unprinted: 10-section, for individual labeling with M-PEN, ZB-T or CMS system, sufficient for 100 terminal blocks, for a terminal width of 10.2 mm, color: White
1053014	ZB10,LGS:FORTL.ZAHLEN	Zack strip, 10-section, printed horizontally: with the numbers, 1-10, 11-20 etc. up to 991-1000, color: white

PLC-RSC- 24UC/21-21AU Order No.: 2967112
http://eshop.phoenixcontact.de/phoenix/treeViewClick.do?UID=2967112

5060883	ZB10/WH-100:UNBEDRUCKT	Zack strip, unprinted: 10-section, for individual labeling with M-PEN, ZB-T or CMS system, large batch, sufficient for labeling 1000 terminal blocks, for a terminal width of 10.2 mm, color: White

Tools

1204517	SZF 1-0,6X3,5	Screwdriver, blade: 0.6 x 3.5 x 100 mm, length 180 mm

Diagrams/Drawings

Diagram

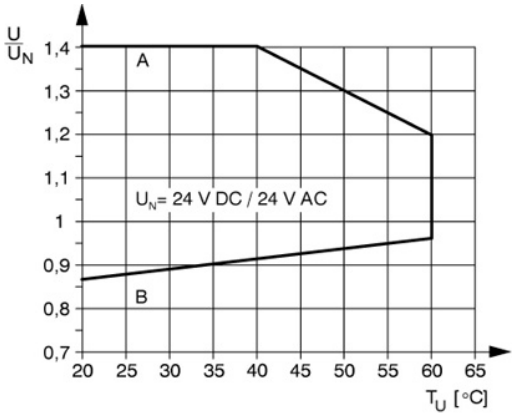

Circuit diagram

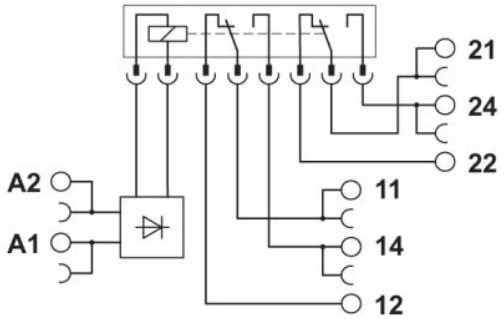

PLC-RSC- 24UC/21-21AU Order No.: 2967112
http://eshop.phoenixcontact.de/phoenix/treeViewClick.do?UID=2967112

Address

PHOENIX CONTACT Deutschland GmbH
Flachsmarktstr. 8
32825 Blomberg,Germany
Phone +49 5235 3 12000
Fax +49 5235 3 41200
http://www.phoenixcontact.de

© 2010 Phoenix Contact
Technical modifications reserved;