Excellent Integrated System Limited

Stocking Distributor

Click to view price, real time Inventory, Delivery & Lifecycle Information:

Molex Connector Corporation
0386303708

For any questions, you can email us directly:
sales@integrated-circuit.com

38630

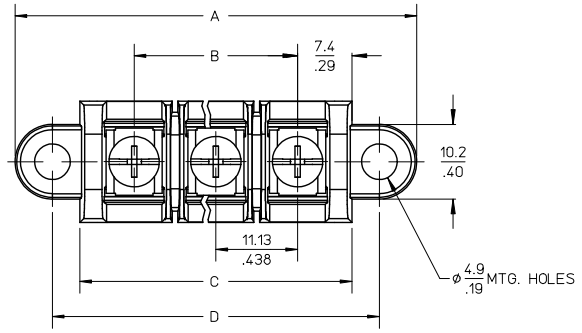

MATERIAL NUMBER (STD.)	MATERIAL NUMBER (-50)	NO. OF CIRCUITS	A	B	C	D
386303102	386303702	2	43.4 (1.71)	11.13 (.438)	25.9 (1.02)	33.3 (1.31)
386303103	386303703	3	54.6 (2.15)	22.22 (.875)	37.1 (1.46)	44.5 (1.75)
386303104	386303704	4	65.7 (2.59)	33.35 (1.313)	48.3 (1.90)	55.6 (2.19)
386303105	386303705	5	76.7 (3.02)	44.45 (1.750)	59.2 (2.33)	66.5 (2.62)
386303106	386303706	6	87.9 (3.46)	55.57 (2.188)	70.4 (2.77)	77.7 (3.06)
386303107	386303707	7	99.1 (3.90)	66.67 (2.625)	81.5 (3.21)	88.9 (3.50)
386303108	386303708	8	110.2 (4.34)	77.80 (3.063)	92.7 (3.65)	100.0 (3.94)
386303109	386303709	9	121.2 (4.77)	88.90 (3.500)	103.6 (4.08)	111.0 (4.37)
386303110	386303710	10	132.3 (5.21)	100.03 (3.938)	114.8 (4.52)	122.2 (4.81)
386303111	386303711	11	143.5 (5.65)	111.13 (4.375)	125.9 (4.96)	133.4 (5.25)
386303112	386303712	12	154.7 (6.09)	122.25 (4.813)	137.2 (5.40)	144.5 (5.69)
386303113	386303713	13	165.6 (6.52)	133.35 (5.250)	148.1 (5.83)	155.4 (6.12)
386303114	386303714	14	176.8 (6.96)	144.45 (5.687)	159.3 (6.27)	166.6 (6.56)
386303115	386303715	15	188.0 (7.40)	155.58 (6.125)	170.4 (6.71)	177.8 (7.00)
386303116	386303716	16	199.1 (7.84)	166.70 (6.563)	181.6 (7.15)	189.0 (7.44)

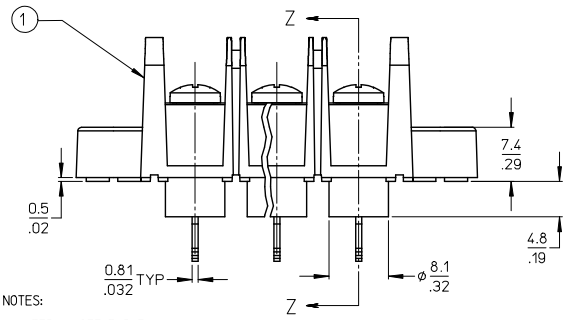

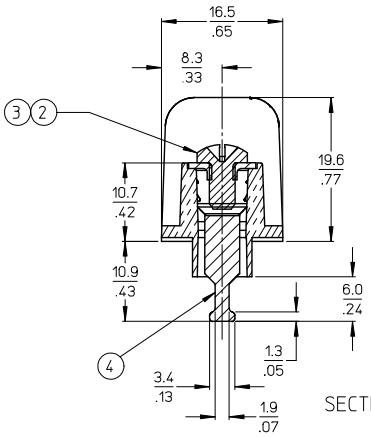

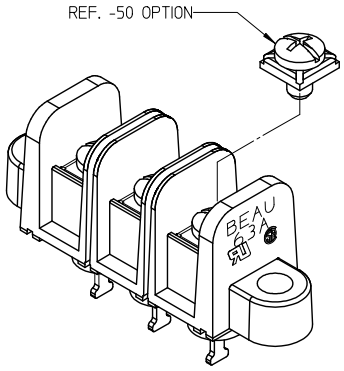

NOTES:

1. MATERIAL: SEE TABLE
2. FINISHES: SEE TABLE
3. PRODUCT SPECIFICATION: NOT REQUIRED
4. PACKAGING: NOT REQUIRED
5. MATES WITH: NONE
6. "XX" REFERS TO QTY. OF CIRCUITS
7. ROHS COMPLIANT (B)

ITEM	QTY.	DESCRIPTION	MATERIAL	FINISH
4	XX	TERMINAL, SOLDER TAIL	BRASS	TIN PLATE
3	XX	SCREW/WSHR #6-32X.250 PAN, PH-SL (-50)	STEEL (B)	ZN, CLEAR CHROMATE
2	XX	SCREW #6-32X.250 BHD, PH-SL (STD.)	STEEL (B)	ZN, CLEAR CHROMATE
1	1	BARRIER TERMINAL STRIP (B)	POLYESTER (PBT)	BLACK

REV	DESCRIPTION
B	UPDATE MAT. DESCRIP. EC NO: WNA2009-0085 DRWN:JENCINAS 2008/11/25 CHKD:CYORK 2008/12/15 APPR:JMACNEIL 2008/12/15

QUALITY SYMBOLS: ▼=0 ⊄=0

GENERAL TOLERANCES (UNLESS SPECIFIED)

	mm	INCH
4 PLACES	± ---	± ---
3 PLACES	± ---	± .005
2 PLACES	± 0.13	± .01
1 PLACE	± 0.3	± ---
ANGULAR ± 2 °		

DRAFT WHERE APPLICABLE MUST REMAIN WITHIN DIMENSIONS

DIMENSION STYLE: MM/IN
SCALE: 2:1
DESIGN UNITS: INCH
THIRD ANGLE PROJECTION

		DATE
DRAWN BY	R. STONE	2003/03/25
CHECKED BY	R. KEMP	2003/03/26
APPROVED BY	P. WALTZ	2003/03/28

TITLE: 11.13/.438" BTS 600V SOLDER TAIL, MTG ENDS (63A2XX)

MOLEX INCORPORATED

MATERIAL NO.: SEE CHART
DOCUMENT NO.: SD-38630-003
SHEET NO.: 1 OF 1
SIZE: B

THIS DRAWING CONTAINS INFORMATION THAT IS PROPRIETARY TO MOLEX INCORPORATED AND SHOULD NOT BE USED WITHOUT WRITTEN PERMISSION

tb_frame_B_P_ME_T
Rev. E 2006/04/15