Excellent Integrated System Limited

Stocking Distributor

Click to view price, real time Inventory, Delivery & Lifecycle Information:

Molex Connector Corporation
0386305406

For any questions, you can email us directly:
sales@integrated-circuit.com

38630

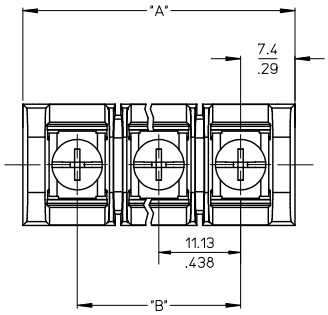

MATERIAL NUMBER (STD.)	MATERIAL NUMBER (-50)	NO. OF CIRCUITS	A	B
386304802	386305402	2	25.9 (1.02)	11.13 (.438)
386304803	386305403	3	37.1 (1.46)	22.22 (.875)
386304804	386305404	4	48.3 (1.90)	33.35 (1.313)
386304805	386305405	5	59.2 (2.33)	44.45 (1.750)
386304806	386305406	6	70.4 (2.77)	55.57 (2.188)
386304807	386305407	7	81.5 (3.21)	66.67 (2.625)
386304808	386305408	8	92.7 (3.65)	77.80 (3.063)
386304809	386305409	9	103.6 (4.08)	88.90 (3.500)
386304810	386305410	10	114.8 (4.52)	100.03 (3.938)
386304811	386305411	11	125.9 (4.96)	111.13 (4.375)
386304812	386305412	12	137.2 (5.40)	122.25 (4.813)
386304813	386305413	13	148.1 (5.83)	133.35 (5.250)
386304814	386305414	14	159.3 (6.27)	144.45 (5.687)
386304815	386305415	15	170.4 (6.71)	155.58 (6.125)
386304816	386305416	16	181.6 (7.15)	166.70 (6.563)

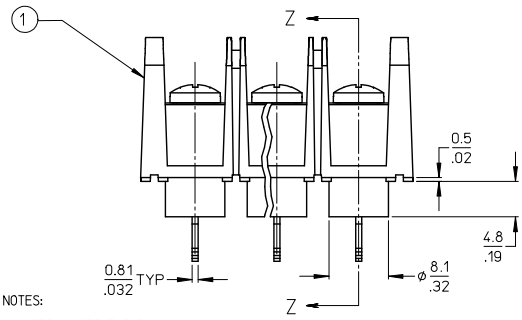

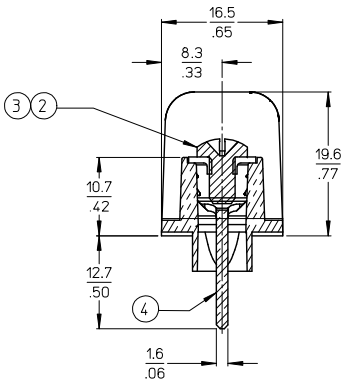

SECTION Z-Z

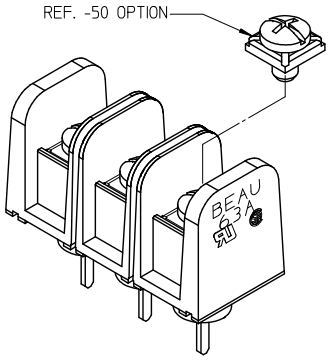

NOTES:

1. MATERIAL: SEE TABLE
2. FINISHES: SEE TABLE
3. PRODUCT SPECIFICATION: NOT REQUIRED
4. PACKAGING: NOT REQUIRED
5. MATES WITH: NONE
6. "XX" REFERS TO QTY. OF CIRCUITS
7. ROHS COMPLIANT (C)

ITEM	QTY.	DESCRIPTION	MATERIAL	FINISH
4	XX	TERMINAL, WIRE WRAP, LONG, #6-32.	BRASS	TIN PLATE
3	XX	SCREW/WSHR #6-32X.250 PAN, PH-SL (-50)	STEEL (C)	ZN, CLEAR CHROMATE
2	XX	SCREW #6-32X.250 BHD, PH-SL (STD.)	STEEL (C)	ZN, CLEAR CHROMATE
1	1	BARRIER TERMINAL STRIP (C)	POLYESTER (PBT)	BLACK

REV	DESCRIPTION
C	UPDATE MAT. DESCRIP. EC NO: WNA2009-0085 DRWN:JENCINAS 2008/11/25 CHKD:CYORK 2008/12/15 APPR:JMACNEIL 2008/12/15

QUALITY SYMBOLS: ▼=0 ⊄=0

GENERAL TOLERANCES (UNLESS SPECIFIED)

	mm	INCH
4 PLACES	± ---	± ---
3 PLACES	± ---	± .005
2 PLACES	± 0.13	± .01
1 PLACE	± 0.3	± ---
ANGULAR ± 2 °		

DRAFT WHERE APPLICABLE MUST REMAIN WITHIN DIMENSIONS

DIMENSION STYLE: MM/IN
SCALE: 2:1
DESIGN UNITS: INCH
THIRD ANGLE PROJECTION

		DATE
DRAWN BY	R. STONE	2003/03/25
CHECKED BY	R. KEMP	2003/03/27
APPROVED BY	P. WALTZ	2003/03/28

TITLE: 11.13/.438" BTS, 600V PC TAIL W/STD TURRET & NO MTG ENDS (63A3XX-C)

MOLEX INCORPORATED

MATERIAL NO.: SEE CHART
DOCUMENT NO.: SD-38630-006
SHEET NO.: 1 OF 1
SIZE: B

THIS DRAWING CONTAINS INFORMATION THAT IS PROPRIETARY TO MOLEX INCORPORATED AND SHOULD NOT BE USED WITHOUT WRITTEN PERMISSION

tb_frame_B_P_ME_T
Rev. E 2006/04/15