# Excellent Integrated System Limited

Stocking Distributor

Click to view price, real time Inventory, Delivery & Lifecycle Information:

Molex Connector Corporation
0399810409

For any questions, you can email us directly:
sales@integrated-circuit.com

39980

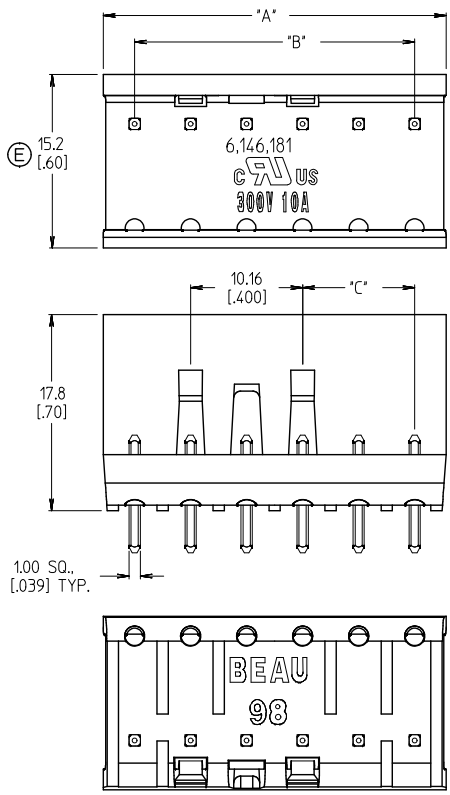


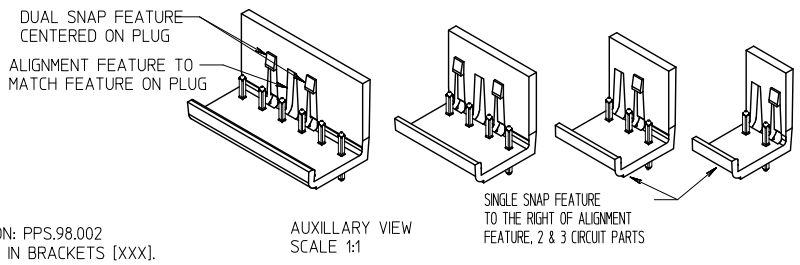


AUXILLARY VIEW
SCALE 1:1

NOTES:

1. MATERIAL: SEE TABLE
2. FINISHES: SEE TABLE
3. PRODUCT SPECIFICATION: PPS.98.002
4. INCH DIMS ARE SHOWN IN BRACKETS [XXX].
5. "XX" REFERS TO QTY. OF CIRCUITS.
6. ASSEMBLY IS ROHS COMPLIANT.
7. REPLACES DWG. SD-39980-0402.

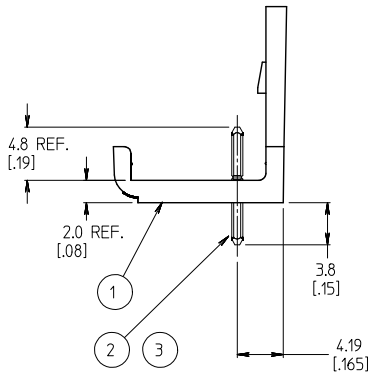


| NUMBER OF CIRCUITS "XX" | DIM. "A" | DIM. "B" | DIM. "C" ±.013 | MATERIAL NO. TIN (STD) | MATERIAL NO. GOLD OPTION |
|---|---|---|---|---|---|
| 02 | 10.77 [.424] | 5.08 [.200] | N/A | 39980-0402 | 39981-0402 |
| 03 | 15.85 [.624] | 10.16 [.400] | 5.08 [.200] | 39980-0403 | 39981-0403 |
| 04 | 20.93 [.824] | 15.24 [.600] | 5.08 [.200] | 39980-0404 | 39981-0404 |
| 05 | 26.01 [1.024] | 20.32 [.800] | 5.08 [.200] | 39980-0405 | 39981-0405 |
| 06 | 31.09 [1.224] | 25.40 [1.000] | 10.16 [.400] | 39980-0406 | 39981-0406 |
| 07 | 36.17 [1.424] | 30.48 [1.200] | 10.16 [.400] | 39980-0407 | 39981-0407 |
| 08 | 41.25 [1.624] | 35.56 [1.400] | 15.24 [.600] | 39980-0408 | 39981-0408 |
| 09 | 46.33 [1.824] | 40.64 [1.600] | 15.24 [.600] | 39980-0409 | 39981-0409 |
| 10 | 51.41 [2.024] | 45.72 [1.800] | 20.32 [.800] | 39980-0410 | 39981-0410 |
| 11 | 56.49 [2.224] | 50.80 [2.000] | 20.32 [.800] | 39980-0411 | 39981-0411 |
| 12 | 61.57 [2.424] | 55.88 [2.200] | 25.40 [1.000] | 39980-0412 | 39981-0412 |
| 13 | 66.65 [2.624] | 60.96 [2.400] | 25.40 [1.000] | 39980-0413 | 39981-0413 |
| 14 | 71.73 [2.824] | 66.04 [2.600] | 30.48 [1.200] | 39980-0414 | 39981-0414 |
| 15 | 76.81 [3.024] | 71.12 [2.800] | 30.48 [1.200] | 39980-0415 | 39981-0415 |
| 16 | 81.89 [3.224] | 76.20 [3.000] | 35.56 [1.400] | 39980-0416 | 39981-0416 |
| 17 | 86.97 [3.424] | 81.28 [3.200] | 35.56 [1.400] | 39980-0417 | 39981-0417 |
| 18 | 92.05 [3.624] | 86.36 [3.400] | 40.64 [1.600] | 39980-0418 | 39981-0418 |
| 19 | 97.13 [3.824] | 91.44 [3.600] | 40.64 [1.600] | 39980-0419 | 39981-0419 |
| 20 | 102.21 [4.024] | 96.52 [3.800] | 45.72 [1.800] | 39980-0420 | 39981-0420 |
| 21 | 107.29 [4.224] | 101.60 [4.000] | 45.72 [1.800] | 39980-0421 | 39981-0421 |
| 22 | 112.37 [4.424] | 106.68 [4.200] | 50.80 [2.000] | 39980-0422 | 39981-0422 |
| 23 | 117.45 [4.624] | 111.76 [4.400] | 50.80 [2.000] | 39980-0423 | 39981-0423 |
| 24 | 122.53 [4.824] | 116.84 [4.600] | 55.88 [2.200] | 39980-0424 | 39981-0424 |

| ITEM | QTY. | DESCRIPTION | MATERIAL | FINISH |
|---|---|---|---|---|
| 3 | XX | HEADER PIN GOLD | BRASS | GOLD |
| 2 | XX | HEADER PIN | BRASS | TIN |
| 1 | 1 | INSULATOR | NYLON | BLACK |

WIDTH WAS .62/IS .60
EC NO: WNA2009-0464
DRWN:CLYORK 2009/02/03
CH'KD:RDEROSS 2009/02/05
APPR:RDEROSS 2009/02/09
DESCRIPTION
E
REV

QUALITY SYMBOLS
▼=0
▽=0

GENERAL TOLERANCES (UNLESS SPECIFIED)

| | mm | INCH |
|---|---|---|
| 4 PLACES | ± --- | ± --- |
| 3 PLACES | ± --- | ± .005 |
| 2 PLACES | ± 0.13 | ± .01 |
| 1 PLACE | ± 0.3 | ± --- |
| ANGULAR ± 2 ° | | |

DRAFT WHERE APPLICABLE MUST REMAIN WITHIN DIMENSIONS

DIMENSION STYLE: MM/IN
SCALE: 3:1
DESIGN UNITS: INCH
THIRD ANGLE PROJECTION

| | | DATE |
|---|---|---|
| DRAWN BY | R. KEMP | 2001/12/05 |
| CHECKED BY | R. KEMP | 2003/10/07 |
| APPROVED BY | L. ROTHAUS | 2003/10/17 |

TITLE: 5.08/.200 SINGLE ROW EUROSTYLE HEADER ASSEMBLY

molex MOLEX INCORPORATED

MATERIAL NO.: SEE CHART
DOCUMENT NO.: SD-39980-006
SHEET NO.: 1 OF 1
SIZE: B

THIS DRAWING CONTAINS INFORMATION THAT IS PROPRIETARY TO MOLEX INCORPORATED AND SHOULD NOT BE USED WITHOUT WRITTEN PERMISSION

tb_frame_B_P_ME_T
Rev. E 2006/04/15