Excellent Integrated System Limited

Stocking Distributor

Click to view price, real time Inventory, Delivery & Lifecycle Information:

Texas Instruments
LM2415T

For any questions, you can email us directly:
sales@integrated-circuit.com

Distributor of Texas Instruments: Excellent Integrated System Limited
Datasheet of LM2415T - IC DRIVER MONOLITHIC TO-220-11
Contact us: sales@integrated-circuit.com Website: www.integrated-circuit.com

LM2415

LM2415 Monolithic Triple 5.5 ns CRT Driver

Literature Number: SNOS435

Distributor of Texas Instruments: Excellent Integrated System Limited
Datasheet of LM2415T - IC DRIVER MONOLITHIC TO-220-11
Contact us: sales@integrated-circuit.com Website: www.integrated-circuit.com

National Semiconductor

August 1999

LM2415
Monolithic Triple 5.5 ns CRT Driver

General Description

The LM2415 is an integrated high voltage CRT driver circuit designed for use in color monitor applications. The IC contains three high input impedance, wide band amplifiers which directly drive the RGB cathodes of a CRT. Each channel has its gain internally set to −14 and can drive CRT capacitive loads as well as resistive loads present in other applications, limited only by the package's power dissipation.

The IC is packaged in an industry standard 11-lead TO-220 molded plastic power package. See Thermal Considerations section.

Features

- Dissipates approximately 45% less power than the LM2405
- Well matched with LM1279 and LM1282 video preamps
- 0V to 5V input range
- Stable with 0 pF–20 pF capacitive loads and inductive peaking networks
- Convenient TO-220 staggered lead package style
- Standard LM240X Family Pinout which is designed for easy PCB layout

Applications

- 1280 x 1024 Displays up to 75 Hz Refresh
- Pixel clock frequencies up to 135 MHz
- Monitors using video blanking

Schematic and Connection Diagrams

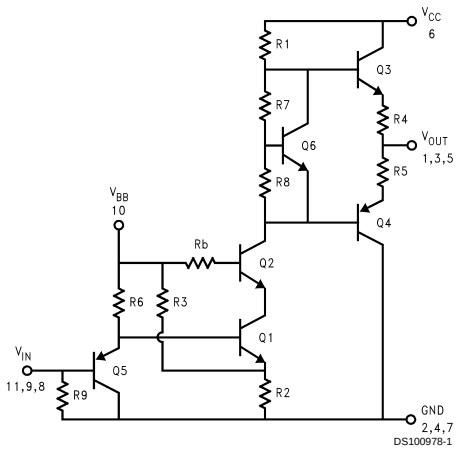

FIGURE 1. Simplified Schematic Diagram (One Channel)

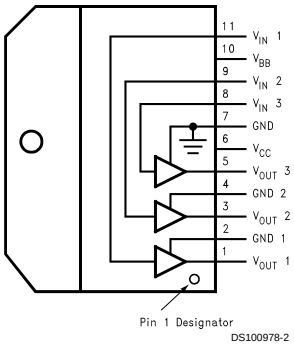

Note: Tab is at GND

Top View
Order Number LM2415T

© 1999 National Semiconductor Corporation

Absolute Maximum Ratings (Notes 1, 3)

If Military/Aerospace specified devices are required, please contact the National Semiconductor Sales Office/ Distributors for availability and specifications.

Supply Voltage, (V_{CC})	+90V
Bias Voltage, (V_{BB})	+16V
Input Voltage, (V_{IN})	0V to 6V
Storage Temperature Range, (T_{STG})	−65˚C to +150˚C
Lead Temperature (Soldering, <10 sec.)	300˚C
ESD Tolerance, Human Body Model	2 kV
Machine Model	250V

Operating Ranges (Note 2)

V_{CC}	+60V to +85V
V_{BB}	+8V to +15V
V_{IN}	+0V to +5V
V_{OUT}	+15V to +75V
Case Temperature	−20˚C to +100˚C

Do not operate the part without a heat sink.

Electrical Characteristics

(See *Figure 2* for Test Circuit)
Unless otherwise noted: V_{CC} = +80V, V_{BB} = +12V, C_L = 8 pF, T_C = 50˚C
DC Tests: V_{IN} = +2.8 V_{DC}
AC Tests: Output = 40 V_{PP} (25V to 65V) at 1 MHz.

Symbol	Parameter	Condition	LM2415			Units
			Min	Typ	Max	
I_{CC}	Supply Current	Per Channel, No Input Signal, No Output Load		13		mA
I_{BB}	Bias Current	All Three Channels		14		mA
V_{OUT}	DC Output Voltage	No AC Input Signal, V_{IN} = 1.35V	62	65	68	V_{DC}
A_V	DC Voltage Gain	No AC Input Signal	−12	−14	−16	
ΔA_V	Gain Matching	(Note 4), No AC Input Signal		1.0		dB
LE	Linearity Error	(Notes 4, 5), No AC Input Signal		8		%
t_R	Rise Time	(Note 6), 10% to 90%		5.5		ns
t_F	Fall Time	(Note 6), 90% to 10%		6.0		ns
OS	Overshoot	(Note 6)		5		%

Note 1: Absolute Maximum Ratings indicate limits beyond which damage to the device may occur.

Note 2: Operating ratings indicate conditions for which the device is functional, but do not guarantee specific performance limits. For guaranteed specifications and test conditions, see the Electrical Characteristics. The guaranteed specifications apply only for the test conditions listed. Some performance characteristics may change when the device is not operated under the listed test conditions.

Note 3: All voltages are measured with respect to GND, unless otherwise specified.

Note 4: Calculated value from Voltage Gain test on each channel.

Note 5: Linearity Error is the variation in dc gain from V_{IN} = 1.0V to V_{IN} = 4.5V.

Note 6: Input from signal generator: t_r, t_f < 1 ns.

AC Test Circuit

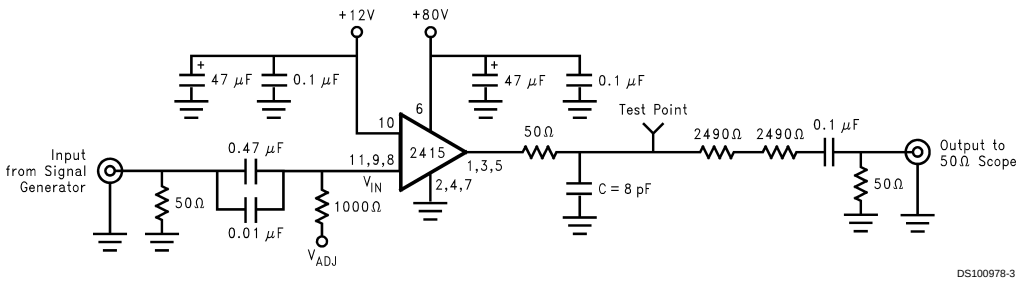

Note: 8 pF load includes parasitic capacitance.

FIGURE 2. Test Circuit (One Channel)

Figure 2 shows a typical test circuit for evaluation of the LM2415. This circuit is designed to allow testing of the LM2415 in a 50Ω environment without the use of an expensive FET probe. The two 2490Ω resistors at the output form a 200:1 voltage divider when connected to a 50Ω load.

Typical Performance Characteristics (V_{CC} = +80 V_{DC}, V_{BB} = +12 V_{DC}, C_L = 8 pF, V_{OUT} = 40V_{PP} (25V-65V), Test Circuit - *Figure 2* unless otherwise specified)

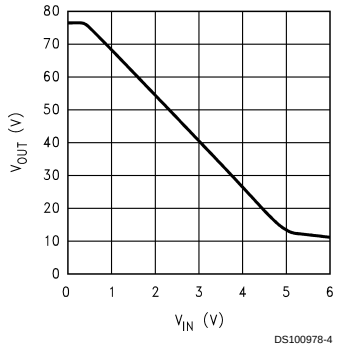

FIGURE 3. V_{OUT} vs V_{IN}

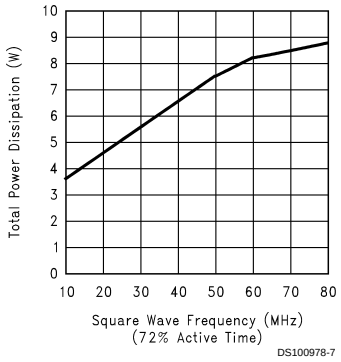

FIGURE 6. Power Dissipation vs Frequency

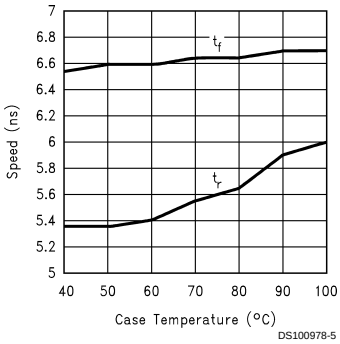

FIGURE 4. Speed vs Temperature

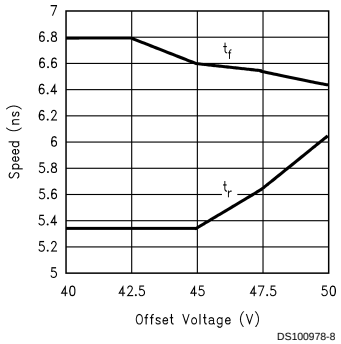

FIGURE 7. Speed vs Offset

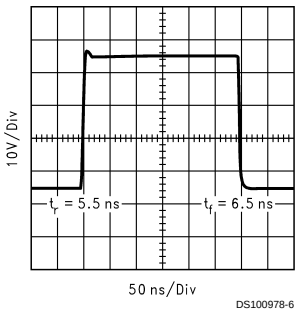

FIGURE 5. LM2415 Pulse Response

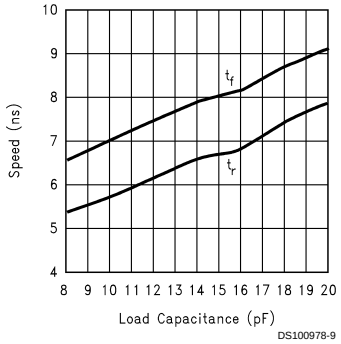

FIGURE 8. Speed vs Load Capacitance

Theory of Operation

The LM2415 is a high voltage monolithic three channel CRT driver suitable for high resolution display applications. The LM2415 operates with 80V and 12V power supplies. The part is housed in the industry standard 11-lead TO-220 molded plastic power package.

The circuit diagram of the LM2415 is shown in *Figure 1*. The PNP emitter follower, Q5, provides input buffering. Q1 and Q2 form a fixed gain cascode amplifier with resistors R1 and R2 setting the gain at −14. Emitter followers Q3 and Q4 isolate the high output impedance of the cascode stage from the capacitance of the CRT cathode which decreases the sensitivity of the device to load capacitance. Q6 provides biasing to the output emitter follower stage to reduce cross-over distortion at low signal levels.

Figure 2 shows a typical test circuit for evaluation of the LM2415. This circuit is designed to allow testing of the LM2415 in a 50Ω environment without the use of an expensive FET probe. In this test circuit, two low inductance resistors in series totaling 4.98 kΩ form a 200:1 wideband, low capacitance probe when connected to a 50Ω coaxial cable and a 50Ω load (such as a 50Ω oscilloscope input). The input signal from the generator is ac coupled to the base of Q5.

Application Hints

INTRODUCTION

National Semiconductor (NSC) is committed to provide application information that assists our customers in obtaining the best performance possible from our products. The following information is provided in order to support this commitment. The reader should be aware that the optimization of performance was done using a specific printed circuit board designed at NSC. Variations in performance can be realized due to physical changes in the printed circuit board and the application. Therefore, the designer should know that component value changes may be required in order to optimize performance in a given application. The values shown in this document can be used as a starting point for evaluation purposes. When working with high bandwidth circuits, good layout practices are also critical to achieving maximum performance.

IMPORTANT INFORMATION

The LM2415 performance is targeted for the SXGA (1280 x 1024, 75 Hz refresh) resolution market. The application circuits shown in this document to optimize performance and to protect against damage from CRT arc-over are designed specifically for the LM2415. If another member of the LM240X family is used, please refer to its datasheet.

POWER SUPPLY BYPASS

Since the LM2415 is a wide bandwidth amplifier, proper power supply bypassing is critical for optimum performance. Improper power supply bypassing can result in large overshoot, ringing or oscillation. A 0.1 µF capacitor should be connected from the supply pin, V_{CC}, to ground, as close to the supply and ground pins as is practical. Additionally, a 10 µF to 100 µF electrolytic capacitor should be connected from the supply pin to ground. The electrolytic capacitor should also be placed reasonably close to the LM2415's supply and ground pins. A 0.1 µF capacitor should be connected from the bias pin, V_{BB}, to ground, as close as is practical to the part.

ARC PROTECTION

During normal CRT operation, internal arcing may occasionally occur. Spark gaps, in the range of 200V, connected from the CRT cathodes to CRT ground will limit the maximum voltage, but to a value that is much higher than allowable on the LM2415. This fast, high voltage, high energy pulse can damage the LM2415 output stage. The application circuit shown in *Figure 9* is designed to help clamp the voltage at the output of the LM2415 to a safe level. The clamp diodes, D1 and D2, should have a fast transient response, high peak current rating, low series impedance and low shunt capacitance. FDH400 or equivalent diodes are recommended. Do not use 1N4148 diodes for the clamp diodes. D1 and D2 should have short, low impedance connections to V_{CC} and ground respectively. The cathode of D1 should be located very close to a separately decoupled bypass capacitor (C3 in *Figure 9*). The ground connection of D2 and the decoupling capacitor should be very close to the LM2415 ground. This will significantly reduce the high frequency voltage transients that the LM2415 would be subjected to during an arcover condition. Resistor R2 limits the arcover current that is seen by the diodes while R1 limits the current into the LM2415 as well as the voltage stress at the outputs of the device. R2 should be a 1/2W solid carbon type resistor. R1 can be a 1/4W metal or carbon film type resistor. Having large value resistors for R1 and R2 would be desirable, but this has the effect of increasing rise and fall times. Inductor L1 is critical to reduce the initial high frequency voltage levels that the LM2415 would be subjected to. The inductor will not only help protect the device but it will also help minimize rise and fall times as well as minimize EMI. For proper arc protection, it is important to not omit any of the arc protection components shown in *Figure 9*.

Application Hints (Continued)

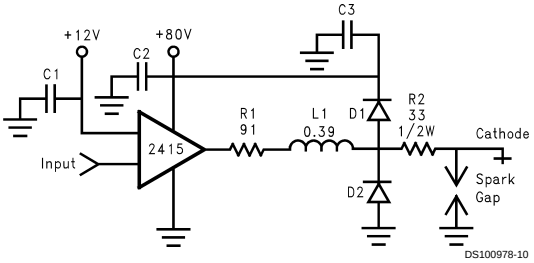

FIGURE 9. One Channel of the LM2415 with the Recommended Application Circuit

OPTIMIZING TRANSIENT RESPONSE

Referring to *Figure 9*, there are three components (R1, R2 and L1) that can be adjusted to optimize the transient response of the application circuit. Increasing the values of R1 and R2 will slow the circuit down while decreasing overshoot. Increasing the value of L1 will speed up the circuit as well as increase overshoot. It is very important to use inductors with very high self-resonant frequencies, preferably above 300 MHz. Ferrite core inductors from J.W. Miller Magnetics (part # 78FR39K) were used for optimizing the performance of the device in the NSC application board. The values shown in *Figure 9* can be used as a good starting point for the evaluation of the LM2415. The NSC demo board also has a position open to add a resistor in parallel with L1. This resistor can be used to help control overshoot. Using variable resistors for R1 and the parallel resistor will simplify finding the values needed for optimum performance in a given application. Once the optimum values are determined the variable resistors can be replaced with fixed values.

EFFECT OF LOAD CAPACITANCE

Figure 8 shows the effect of increased load capacitance on the speed of the device. This demonstrates the importance of knowing the load capacitance in the application.

EFFECT OF OFFSET

Figure 7 shows the variation in rise and fall times when the output offset of the device is varied from 40 V_{DC} to 50 V_{DC}. The rise time shows a maximum variation relative to the center data point (45 V_{DC}) of about 13%. The fall time shows a maximum variation of about 3% relative to the center data point.

THERMAL CONSIDERATIONS

Figure 4 shows the performance of the LM2415 in the test circuit shown in *Figure 2* as a function of case temperature. The figure shows that the rise time of the LM2415 increases by approximately 12% as the case temperature increases from 50˚C to 100˚C. This corresponds to a speed degradation of 2.4% for every 10˚C rise in case temperature. There is a negligible change in fall time vs. temperature in the test circuit.

Figure 6 shows the maximum power dissipation of the LM2415 vs Frequency when all three channels of the device are driving an 8 pF load with a 40 V_{p-p} alternating one pixel on, one pixel off signal. The graph assumes a 72% active time (device operating at the specified frequency) which is typical in a monitor application. The other 28% of the time the device is assumed to be sitting at the black level (65V in this case). This graph gives the designer the information needed to determine the heat sink requirement for the application. The designer should note that if the load capacitance is increased the AC component of the total power dissipation will also increase.

The LM2415 case temperature must be maintained below 100˚C. If the maximum expected ambient temperature is 70˚C and the maximum power dissipation is 8.7W (from *Figure 6*, 72.5 MHz bandwidth) then a maximum heat sink thermal resistance can be calculated:

$$R_{TH} = \frac{100°C - 70°C}{8.7W} = 3.4°C/W$$

This example assumes a capacitive load of 8 pF and no resistive load.

TYPICAL APPLICATION

A typical application of the LM2415 is shown in *Figure 10*. Used in conjunction with an LM1279, a complete video channel from monitor input to CRT cathode can be achieved. Performance is ideal for 1280 x 1024 resolution displays with pixel clock frequencies up to 135 MHz. *Figure 10* is the schematic for the NSC demonstration board that can be used to evaluate the LM1279/2415 combination in a monitor.

PC BOARD LAYOUT CONSIDERATIONS

For optimum performance, an adequate ground plane, isolation between channels, good supply bypassing and minimizing unwanted feedback are necessary. Also, the length of the signal traces from the preamplifier to the LM2415 and from the LM2415 to the CRT cathode should be as short as possible. The following references are recommended:

Ott, Henry W., “Noise Reduction Techniques in Electronic Systems”, John Wiley & Sons, New York, 1976.

“Video Amplifier Design for Computer Monitors”, National Semiconductor Application Note 1013.

Pease, Robert A., “Troubleshooting Analog Circuits”, Butterworth-Heinemann, 1991.

Because of its high small signal bandwidth, the part may oscillate in a monitor if feedback occurs around the video channel through the chassis wiring. To prevent this, leads to the video amplifier input circuit should be shielded, and input circuit wiring should be spaced as far as possible from output circuit wiring.

Application Hints (Continued)

NSC Demonstration Board

Figure 11 shows routing and component placement on the NSC LM1279/240X demonstration board. The schematic of the board is shown in *Figure 10*. This board provides a good example of a layout that can be used as a guide for future layouts. Note the location of the following components:

- *C55*—V_{CC} bypass capacitor, located very close to pin 6 and ground pins
- *C43, C44*—V_{BB} bypass capacitors, located close to pin 10 and ground
- *C53–C55*—V_{CC} bypass capacitors, near LM2415 and V_{CC} clamp diodes. Very important for arc protection.

The routing of the LM2415 outputs to the CRT is very critical to achieving optimum performance. *Figure 12* shows the routing and component placement from pin 1 of the LM2415 to the blue cathode. Note that the components are placed so that they almost line up from the output pin of the LM2415 to the blue cathode pin of the CRT connector. This is done to minimize the length of the video path between these two components. Note also that D14, D15, R29 and D13 are placed to minimize the size of the video nodes that they are attached to. This minimizes parasitic capacitance in the video path and also enhances the effectiveness of the protection diodes. The anode of protection diode D14 is connected directly to a section of the the ground plane that has a short and direct path to the LM2415 ground pins. The cathode of D15 is connected to V_{CC} very close to decoupling capacitor C55 (see *Figure 12*) which is connected to the same section of the ground plane as D14. The diode placement and routing is very important for minimizing the voltage stress on the LM2415 during an arc over event. Lastly, notice that S3 is placed very close to the blue cathode and is tied directly to CRT ground.

Application Hints (Continued)

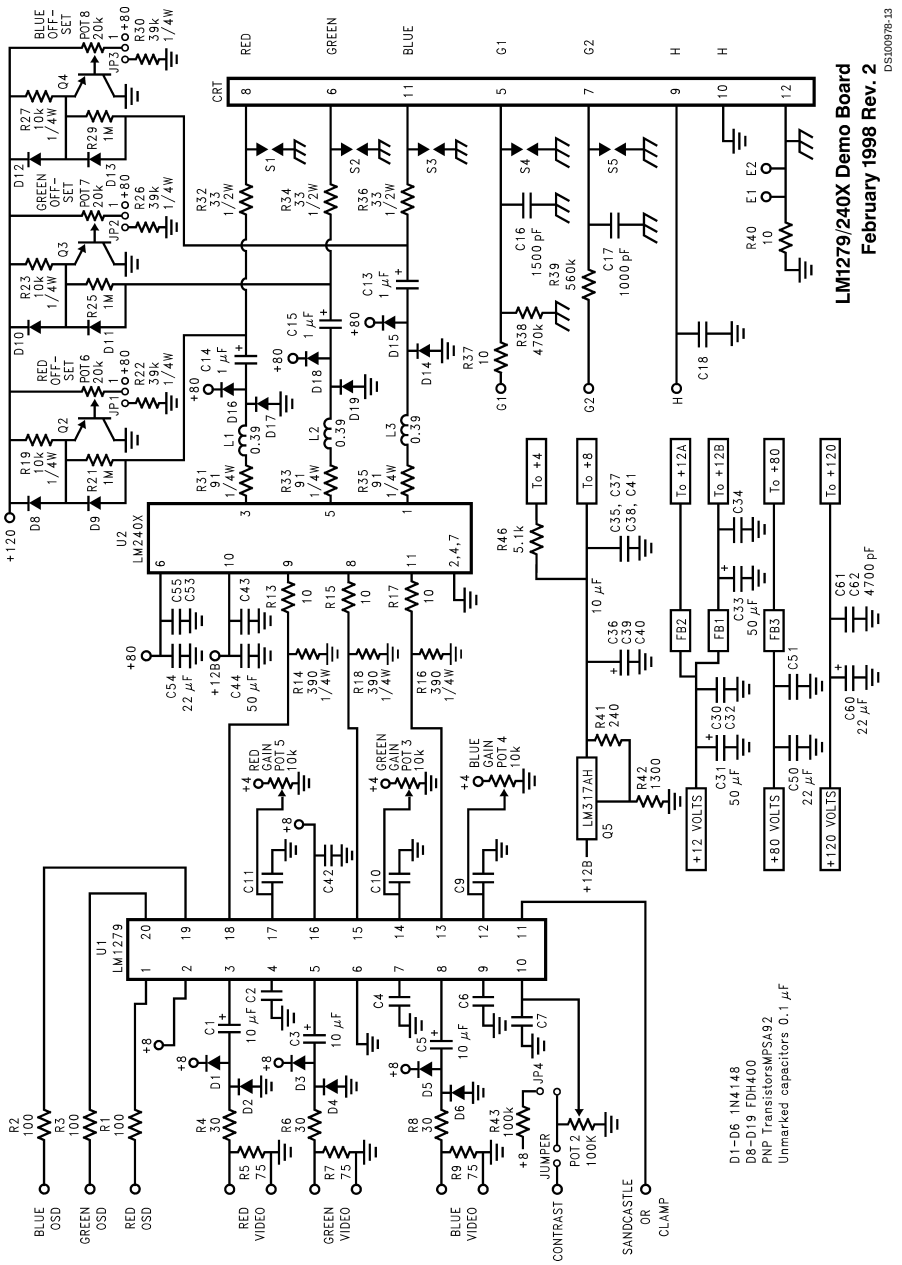

FIGURE 10. LM1279/240X Demonstration Board Schematic

Application Hints (Continued)

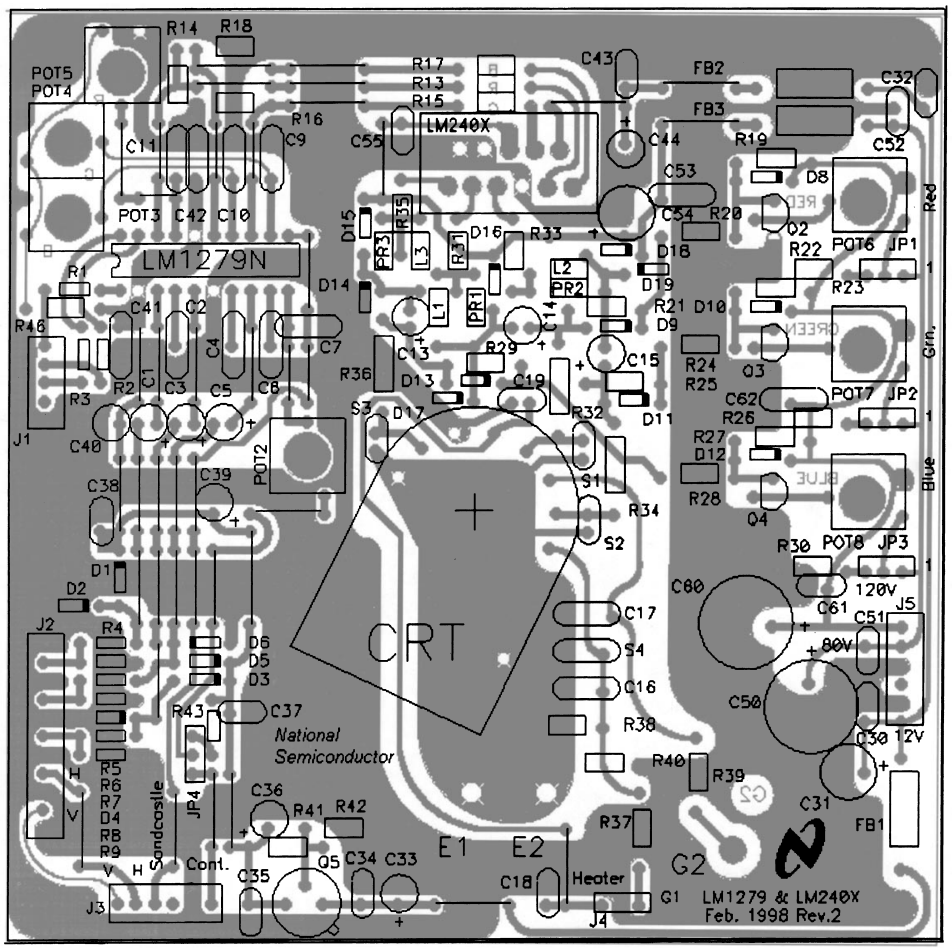

DS100978-14

FIGURE 11. LM1279/240X Demo Board Layout

Application Hints (Continued)

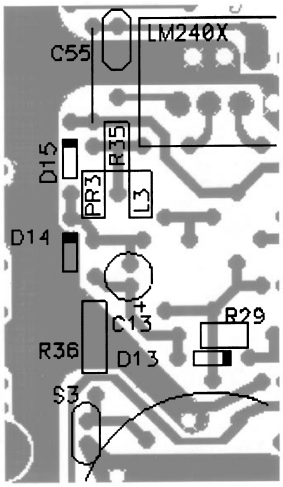

DS100978-15

FIGURE 12. Trace Routing and Component Placement for Blue Channel Output

Physical Dimensions inches (millimeters) unless otherwise noted

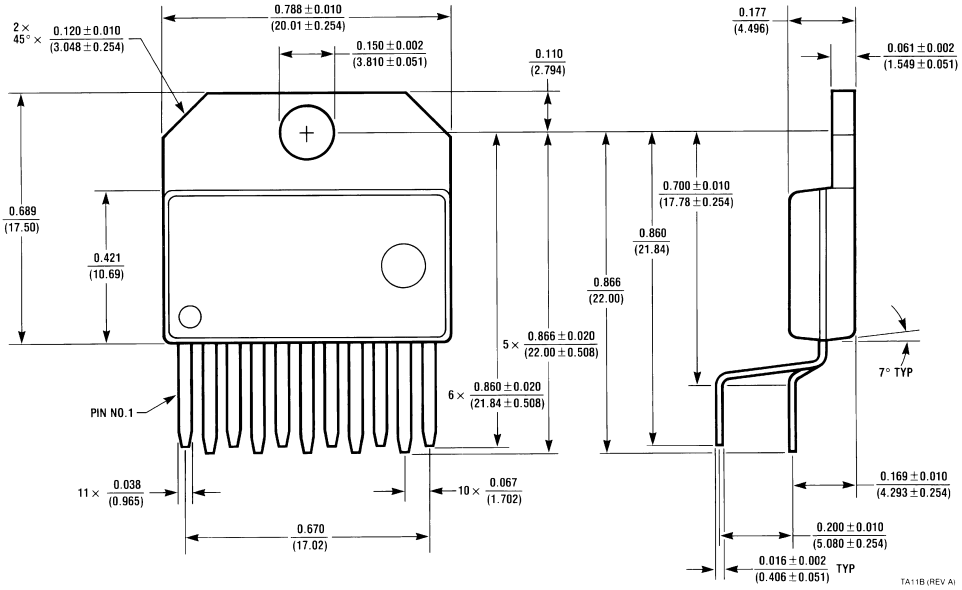

NS Package Number TA11B
Order Number LM2415T

LIFE SUPPORT POLICY

NATIONAL'S PRODUCTS ARE NOT AUTHORIZED FOR USE AS CRITICAL COMPONENTS IN LIFE SUPPORT DEVICES OR SYSTEMS WITHOUT THE EXPRESS WRITTEN APPROVAL OF THE PRESIDENT AND GENERAL COUNSEL OF NATIONAL SEMICONDUCTOR CORPORATION. As used herein:

1. Life support devices or systems are devices or systems which, (a) are intended for surgical implant into the body, or (b) support or sustain life, and whose failure to perform when properly used in accordance with instructions for use provided in the labeling, can be reasonably expected to result in a significant injury to the user.
2. A critical component is any component of a life support device or system whose failure to perform can be reasonably expected to cause the failure of the life support device or system, or to affect its safety or effectiveness.

National Semiconductor Corporation
Americas
Tel: 1-800-272-9959
Fax: 1-800-737-7018
Email: support@nsc.com

www.national.com

National Semiconductor Europe
Fax: +49 (0) 1 80-530 85 86
Email: europe.support@nsc.com
Deutsch Tel: +49 (0) 1 80-530 85 85
English Tel: +49 (0) 1 80-532 78 32
Français Tel: +49 (0) 1 80-532 93 58
Italiano Tel: +49 (0) 1 80-534 16 80

National Semiconductor Asia Pacific Customer Response Group
Tel: 65-2544466
Fax: 65-2504466
Email: sea.support@nsc.com

National Semiconductor Japan Ltd.
Tel: 81-3-5639-7560
Fax: 81-3-5639-7507

National does not assume any responsibility for use of any circuitry described, no circuit patent licenses are implied and National reserves the right at any time without notice to change said circuitry and specifications.

IMPORTANT NOTICE

Texas Instruments Incorporated and its subsidiaries (TI) reserve the right to make corrections, modifications, enhancements, improvements, and other changes to its products and services at any time and to discontinue any product or service without notice. Customers should obtain the latest relevant information before placing orders and should verify that such information is current and complete. All products are sold subject to TI's terms and conditions of sale supplied at the time of order acknowledgment.

TI warrants performance of its hardware products to the specifications applicable at the time of sale in accordance with TI's standard warranty. Testing and other quality control techniques are used to the extent TI deems necessary to support this warranty. Except where mandated by government requirements, testing of all parameters of each product is not necessarily performed.

TI assumes no liability for applications assistance or customer product design. Customers are responsible for their products and applications using TI components. To minimize the risks associated with customer products and applications, customers should provide adequate design and operating safeguards.

TI does not warrant or represent that any license, either express or implied, is granted under any TI patent right, copyright, mask work right, or other TI intellectual property right relating to any combination, machine, or process in which TI products or services are used. Information published by TI regarding third-party products or services does not constitute a license from TI to use such products or services or a warranty or endorsement thereof. Use of such information may require a license from a third party under the patents or other intellectual property of the third party, or a license from TI under the patents or other intellectual property of TI.

Reproduction of TI information in TI data books or data sheets is permissible only if reproduction is without alteration and is accompanied by all associated warranties, conditions, limitations, and notices. Reproduction of this information with alteration is an unfair and deceptive business practice. TI is not responsible or liable for such altered documentation. Information of third parties may be subject to additional restrictions.

Resale of TI products or services with statements different from or beyond the parameters stated by TI for that product or service voids all express and any implied warranties for the associated TI product or service and is an unfair and deceptive business practice. TI is not responsible or liable for any such statements.

TI products are not authorized for use in safety-critical applications (such as life support) where a failure of the TI product would reasonably be expected to cause severe personal injury or death, unless officers of the parties have executed an agreement specifically governing such use. Buyers represent that they have all necessary expertise in the safety and regulatory ramifications of their applications, and acknowledge and agree that they are solely responsible for all legal, regulatory and safety-related requirements concerning their products and any use of TI products in such safety-critical applications, notwithstanding any applications-related information or support that may be provided by TI. Further, Buyers must fully indemnify TI and its representatives against any damages arising out of the use of TI products in such safety-critical applications.

TI products are neither designed nor intended for use in military/aerospace applications or environments unless the TI products are specifically designated by TI as military-grade or "enhanced plastic." Only products designated by TI as military-grade meet military specifications. Buyers acknowledge and agree that any such use of TI products which TI has not designated as military-grade is solely at the Buyer's risk, and that they are solely responsible for compliance with all legal and regulatory requirements in connection with such use.

TI products are neither designed nor intended for use in automotive applications or environments unless the specific TI products are designated by TI as compliant with ISO/TS 16949 requirements. Buyers acknowledge and agree that, if they use any non-designated products in automotive applications, TI will not be responsible for any failure to meet such requirements.

Following are URLs where you can obtain information on other Texas Instruments products and application solutions:

Products		**Applications**	
Audio	www.ti.com/audio	Communications and Telecom	www.ti.com/communications
Amplifiers	amplifier.ti.com	Computers and Peripherals	www.ti.com/computers
Data Converters	dataconverter.ti.com	Consumer Electronics	www.ti.com/consumer-apps
DLP® Products	www.dlp.com	Energy and Lighting	www.ti.com/energy
DSP	dsp.ti.com	Industrial	www.ti.com/industrial
Clocks and Timers	www.ti.com/clocks	Medical	www.ti.com/medical
Interface	interface.ti.com	Security	www.ti.com/security
Logic	logic.ti.com	Space, Avionics and Defense	www.ti.com/space-avionics-defense
Power Mgmt	power.ti.com	Transportation and Automotive	www.ti.com/automotive
Microcontrollers	microcontroller.ti.com	Video and Imaging	www.ti.com/video
RFID	www.ti-rfid.com		
OMAP Mobile Processors	www.ti.com/omap		
Wireless Connectivity	www.ti.com/wirelessconnectivity		

TI E2E Community Home Page e2e.ti.com

Mailing Address: Texas Instruments, Post Office Box 655303, Dallas, Texas 75265
Copyright © 2011, Texas Instruments Incorporated