Excellent Integrated System Limited

Stocking Distributor

Click to view price, real time Inventory, Delivery & Lifecycle Information:

ITT Cannon, LLC
KPSE06E10-6PF0

For any questions, you can email us directly:
sales@integrated-circuit.com

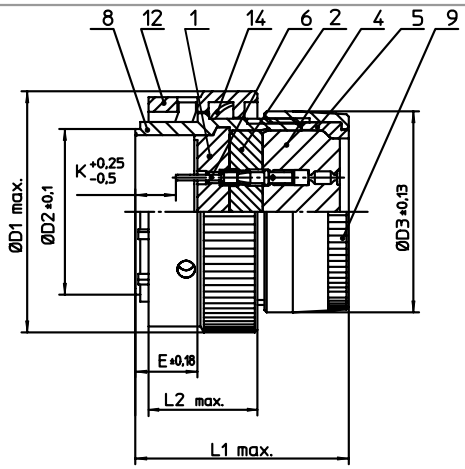

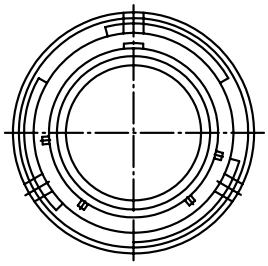

NO.	MASSE / DIMENSIO
D1	23.6
D2	12.2
D3	17.5
E	8.02
K	2.16
L1	33
L2	15.9

NO.	BESCHREIBUNG / DESCRIPTION
1	ISOLIERKÖRPER STIFT / INSULATOR PIN
2	ISOLIERKÖRPER MITTE / WAVER
4	DICHTKÖRPER / GROMMET
5	ENDRING / ENDRING
6	KONTAKT STIFT / CONTACT PIN
8	GEHÄUSE / RECEPTACLE
9	ENDGEHÄUSE / ENDBELL
12	ÜBERWURFMUTTER / COUPLING NUT
14	WELLFEDER / WASHER

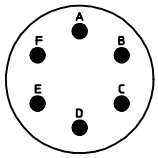

Note: Due to an automatic nomenclature system, numbers generated may not be sequential.

Specification and Dimensions subject to chang
Drawings illustrate normal insulator positioning

Material Specification:	
Shell Material:	Aluminium alloy
Shell Plating:	Olive drab chromate over cadmium plating
Insulator Material:	Polychloroprene
Contact Material:	Copper alloy, gold plated
Contact Plating:	Copper alloy, gold plated

all dimensions are in mm
Dimensions without tolerance indications are general tolerances in acc. with DIN7168m

drawing for
CUSTOMER

ITT
Engineered for life
ITT CANNON GmbH
D - 71384 Weinstadt/Germany

description KPSE06E106PF0
Straight plug
Grommet seal
Crimp Contacts / Pin / Layout: 10-6

© All rights reserved, Reproduction or issue to third in any form whatever is only permitted with written authorization of ITT Cannon

page 1/1
revision 1012 5. Jul 16