Excellent Integrated System Limited

Stocking Distributor

Click to view price, real time Inventory, Delivery & Lifecycle Information:

Panasonic Electronic Components
ERJ-1TYF100U

For any questions, you can email us directly:
sales@integrated-circuit.com

Issue No. : 151RJ00004103

Date of Issue : February 6, 2004

Digi-Key

Classification : ■New □Change □Renewal

PRODUCT SPECIFICATION FOR INFORMATION

Product Description	:	Thick Film Chip Resistor
Product Part Number	:	ERJ1TYF***U, ERJ1TY0R00U
Classification of Spec	:	Individual Product Spec
Applications	:	Standard electronic equipment
		For other applications, contact our person singed below.
Term of Validity	:	February 5, 2009 from the date of issue

CUSTOMER USE ONLY	Receipt Record # :
	Date of Receipt: :
	Received by : Title : Dept :

Matsushita Electronic Components Co.,Ltd.
LCR Device Company
Resistor Business Unit

401 Sadamasa-cho, Fukui City, Fukui 910-8502 Japan
Tel : Fukui (0776) 56-8034
Fax : Fukui (0776) 56-3114

Prepared by :	Engineering Department
Contact Person :	H.Yabukoshi
Title :	
Approved :	S.Hoshitoku
Title :	Manager of Engineering

Subject	Spec. No.
Chip Resistor PRODUCT SPECIFICATION FOR IMFORMATION	151-SRJ-E7049B
Part No.	
ERJ1TYF	14 - 1

1. Dimension

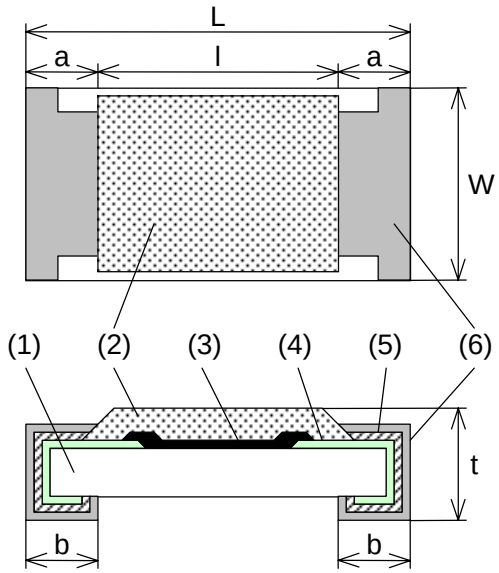

(1) Substrate : Alumina
(2) Protective Coating : Resin
(3) Resistive Element : Metal glaze
(4) Inner Termination : Thick film material
(5) Middle Termination : Ni Plating
(6) Outer Termination : Sn Plating

* Under running changing form Sn/Pb plating to Sn plating.

	L	W	a	b	t	l
Dimension (mm)	6.40+/-0.20	3.20+/-0.20	0.65+/-0.20	0.60+/-0.20	0.60+/-0.10	5.10+/-0.20

2. Power Derating Curve

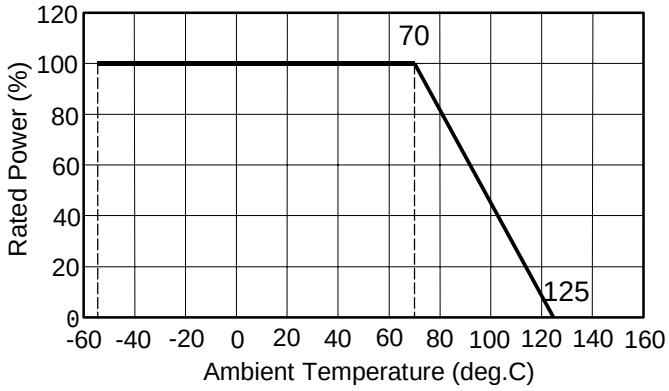

Operating temperature range
: -55 to 125 deg.C

Figure 1

3. Ratings

3-1 Resistor

Item	Rated value	Explanation
Power Rating	1.0W	When used at ambient temperature above 70 deg.C, power rating shall be determined in accordance with Figure 1.

Subject		Spec. No.
Chip Resistor	PRODUCT SPECIFICATION FOR IMFORMATION	151-SRJ-E7049B
Part No.		
	ERJ1TYF	14 - 2

Item	Rated value	Explanation
Rated voltage & Rated Continuous Working Voltage	The rated voltage of each resistance should be calculated from the equation below. And when the rated voltage exceeds the maximum RCWV, the maximum RCWV should be the rated voltage. Rated voltage = (Power rating x Resistance Value) $^{1/2}$ The maximum RCWV : 200V	
Overload Voltage	The overload voltage should be 2.5 times the rated voltage. And when the voltage exceeds the maximum overload voltage, the maximum overload voltage should be the overload voltage. The maximum overload voltage : 400V	
Resistance Tolerance	F : +/- 1%	
Resistance	10 ohm – 1.0 M ohm (E-24 series)	
Circuit board of use	You should use the aluminum or the ceramic substrate when the added wttage exceeds 0.5W.	

3-2 Jumper

Item	Rated value	Explanation
Ratied current	2 A	When used at ambient temperature above 70 deg.C, power rating shall be determined in accordance with Figure 1.
Overload current	4 A	
Resistance value	Less than 50 m ohm	

4. Explanation of Part Number

4-1 Resistor

E	R	J	1	T	Y	F	1	0	2	U
(1)			(2)		(3)	(4)	(5)			(6)

(1) Product Code : Thick Film Chip Resistor

(2) Size and Rated Power : 6.4 mm x 3.2mm, 1.0 W

(3) Marking : Marking on Black Side

(4) Resistance Tolerance

Code	Resistance Tolerance
F	+/- 1%

(5) Resistance Value

The first two digits are the significant figures of resistance value, and the last figure shows the number of zero following in ohm.

(6) Packaging Configuration

Code	Packaging Configuration
U	Taping (4000pcs/reel)

4-2 Jumper

E	R	J	1	T	Y	0	R	0	0	U
(1)			(2)		(3)	(4)				(5)

(1) Product Code : Thick Film Chip Resistor

(2) Size and Rated Power : 6.4mm x 3.2 mm

(3) Resistance value

Code	Resistance value
0R00	Jumper (Less than 50 m ohm)

(4) Packaging Configuration

Code	Packaging Configuration
U	Taping (4000pcs/reel)

5. Appearance & Construction

Item	Rated value	Explanation
Appearance & Construction	1. The resistive element should be covered with protective coating that don't fade easily. The surface of coating should avoid unevenness, flaw, pinhole and discoloration. 2. The electrode should be printed uniformly, as shown in the dimensions. The plating should not fade easily, and should avoid unevenness, flaw, pinhole, projection and discoloration. 3. The electrode should be connected electrically, mechanically to resistive element. 4. Dimensions of the substrate should be as in the list and it should not have chipping, flaw, flash and crack. Details of appearance criteria shall be as described in attached sheet.	

As far as there shall not designation especially, the following tests and measurement shall be operated under the following conditions.

Normal temperature : 5 deg.C to 35 deg.C

Normal humidity : 45 % to 85 %

Normal atmospheric pressure : 86 k Pa to 106 k Pa

Subject		Spec. No.
Chip Resistor	PRODUCT SPECIFICATION FOR IMFORMATION	151-SRJ-E7049B
Part No.		
	ERJ1TYF	14 - 4

6. Performance Specification

Item	Specification		Test Method (JIS-C5201-1)
	Resistor	Jumper	
DC resistance	DC resistance value shall be within the specified tolerance.		At 20 deg.C, 65%RH
Temperature coefficient of resistance (TCR)	10 ohm – 1 M ohm : +/- 200 x 10^{-6}/deg.C		Natural resistance change per temperature degree centigrade. $TCR=(R_2-R_1)x10^6/R_1(t_2-t_1)$ ($x10^{-6}$/deg.C) R_1 : Resistance value at reference temperature (t_1) R_2 : Resistance value at test temperature (t_2) t_1 : 25 deg.C , t_2 : 125 deg.C
Short time overload	ΔR : +/-(2%+0.1ohm)	Less than 50m ohm	Resistors shall be applied 2.5 times the rated voltage for 5 seconds. Max. overload voltage shall be 400V.
Intermittent overload	ΔR : +/-(5%+0.1ohm)	Less than 50m ohm	Resistors shall be subjected to 10000 cycles of 2.5 times the rated voltage applied for 1 second with pause of 25 seconds between tests. Max. overload voltage shall be 400V.
Dielectric Withstanding	No evidence of flashover, mechanical damage, arcing or insulation breakdown		AC 400V between substrate and termination for 1 minute. 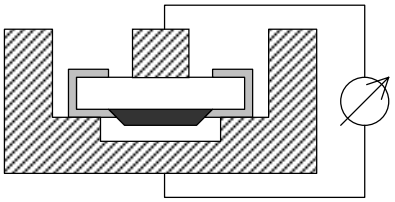 AC power supply or Insulation resistance meter
Insulation resistance	Min. 1000 M ohm		Resistors shall be facing down. After applying DC 400V to the resistor, insulation resistance shall be measured.

Subject		Spec. No.
Chip Resistor	PRODUCT SPECIFICATION FOR IMFORMATION	151-SRJ-E7049B
Part No.		
	ERJ1TYF	14 - 5

Item	Specification		Test Method (JIS-C5201-1)
	Resistor	Jumper	
Noise	10 ohm – 1k ohm : 0 dB (1.0 μV/V) 1.1k ohm – 9.1k ohm : 10 dB (3.2 μV/V) 10k ohm – 91k ohm : 15 dB (5.6 μV/V) 100k ohm – 910k ohm : 20 dB (10 μV/V)		Noise shall be measured by RESISTOR NOISE TEST SET MODEL 315C by Quan-Tech Div. Max. V_R shall be 35 dB.

7. Machinery characteristic

Item	Specification		Test Method (JIS-C5201-1)
	Resistor	Jumper	
Terminal strength	Min. 4.9 N (500g)		Cupper plate : t=0.4mm Pull speed : 10mm/s 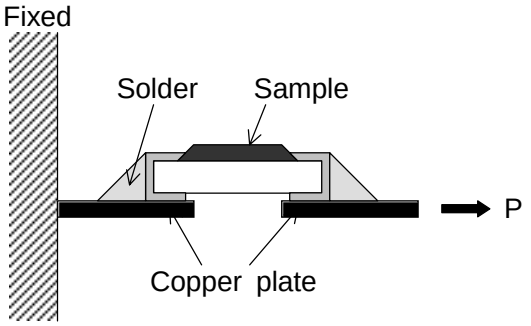
Bending strength	No mechanical damage.		Substrate : Glass epoxy (t=1.6 mm) Span : 90mm Bending distance : 2mm (10 seconds) <Test pattern> 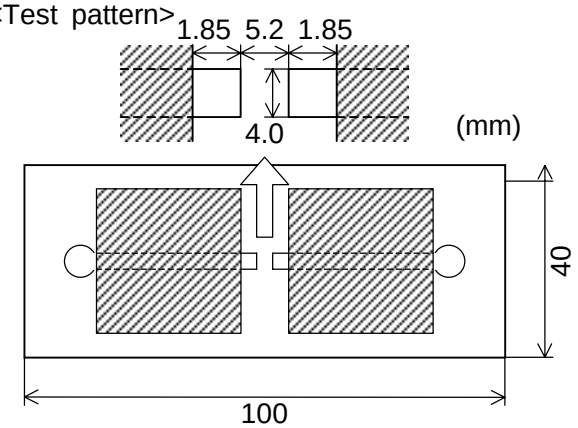
	ΔR : +/-(1%+0.05ohm)	Less than 50m ohm	

Subject		Spec. No.
Chip Resistor	PRODUCT SPECIFICATION FOR IMFORMATION	151-SRJ-E7049B
Part No.		
	ERJ1TYF	14 - 6

Item	Specification		Test Method (JIS-C5201-1)
	Resistor	Jumper	
Solderability	Termination should be covered uniformly with solder (Min. 95% coverage)		Resistors shall be dipped in the melted solder bath at 235 deg.C +/- 5 deg.C for 2 seconds +/- 0.5 second. Flux shall be removed from the surface of termination with clean organic solvent.
Resistance to soldering heat	ΔR : +/-(1%+0.05ohm)	Less than 50m ohm	Resistors shall be dipped in the melted solder bath at 270 deg.C +/- 3 deg.C for 10 seconds +/- 1 second.
Resistance to vibration (Low frequency)	ΔR : +/-(1%+0.05ohm)	Less than 50m ohm	Resistors shall be subjected to a single vibration having as double amplitude of 1.5 mm in 3 directions perpendicular one another for 2 hours each. (6 hours in total) The vibration frequency shall be varied uniformly from 10 Hz to 55 Hz, and return to 10 Hz traversing for 1 min.
Resistance to solvent	Without distinct deformation in appearance		Solvent solution : Isopropyl alcohol (1)Dipping 10 +/- 1 hours, dry in room condition for 30 +/- 10 minutes. (2)Ultrasonic wave washing : 5 +/- 1 min. (0.3W/cm,28kHz) Dry in room condition for 30 +/-10 minutes.
	ΔR : +/-(0.5% +0.05ohm)	Less than 50m ohm	

Subject		Spec. No.
Chip Resistor	PRODUCT SPECIFICATION FOR IMFORMATION	151-SRJ-E7049B
Part No.		
	ERJ1TYF	14 - 7

8. Environmental test

Item	Specification		Test Method (JIS-C5201-1)
	Resistor	Jumper	
Low temperature exposure	ΔR : +/-(1%+0.05ohm)	Less than 50m ohm	Resistors shall be exposed at -55 deg.C +/- 3 deg.C with no load for 1000 hours +48/-0 hours.
Low temperature Operating	ΔR : +/-(1%+0.05ohm)	Less than 50m ohm	Resistors shall be placed at –65 deg.C +/- 5 deg.C for 1.5hours. After applying RCWV for 45 minutes, resistors shall be exposed in room condition for 8 hours +/- 1 hour.
High temperature exposure	ΔR : +/-(1%+0.05ohm)	Less than 50m ohm	Resistors shall be exposed at 125 deg.C +/- 3 deg.C with no load for 1000 hours +48/-0 hours.
Temperature cycling	ΔR : +/-(1%+0.05ohm)	Less than 50m ohm	Resistors shall be tested for 5 cycles continuously in accordance with the following duty cycle. Step / Temperature (deg.C) / Time (min.) 1 / -55 +/-3 / 30 2 / Room temperature / Max. 3 3 / +125 +/-3 / 30 4 / Room temperature / Max.3
Humidity (Steady state)	ΔR : +/-(1%+0.05ohm)	Less than 50m ohm	Resistors shall be exposed at 60 deg.C +/- 2 deg.C and 90% to 95% relative hummidity in a humidity test chamber for 1000 hours +48/-0 hours.
Salt spray	ΔR : +/-(1%+0.05ohm)	Less than 50m ohm	Spray 5 +/- 1 wt% salt water for 96 +/- 4 hours at 35 +/-2 deg.C.
Load life	ΔR : +/-(3%+0.1ohm)	Less than 50m ohm	Resistors shall be operated at DC rated power (1.5 hours "ON", 0.5 hours "OFF") for 1000 hours +48/-0 hours in a test chamber controlled at 70 deg.C +/-2 deg.C.
Load life in humidity	ΔR : +/-(3%+0.1 ohm)	Less than 50m ohm	Resistors shall be operated at DC rated power (1.5 hours “ON”, 0.5 hours “OFF”) for 1000 hours +48/-0 hours in a test chamber controlled at 60 deg.C +/- 2 deg.C and at 90 % to 95% in relative hummidity.

Item	Specification		Test Method (JIS-C5201-1)
	Resistor	Jumper	
Boiling test	ΔR : +/-(1%+0.05ohm)	Less than 50m ohm	Soak in boiling water for 1 +/- 0.1 hour. Resistors shall be exposed at room condition for 30 minuites.

9. Other characteristics

Item	Specification	Test method
Surface Temperature rise	Less than 50 deg.C	Resistors shall be mouted on the Ceramic substrate (t=1.0mm). And the hot spot temperarure rise of chip resistor shall be measured when applied the rated power. Applied voltage must not exceed maximun RCWV.

10. Resistance value Marking

Express resistance value on resin side with three digits.

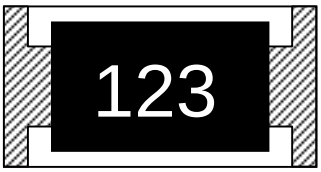

<Example>

123 = 12k ohm

000 = Chip jumper

The first two digits should be significant figures of resistance for E-24 series and the third one denotes number of zeros.

Subject		Spec. No.
Chip Resistor	PRODUCT SPECIFICATION FOR IMFORMATION	151-SRJ-E7049B
Part No.		
	ERJ1TYF	14 - 9

11. Common precautions in handling resistors

⚠ Notice for use

(1) This specification shows the quality and performance of a unit component. Before adoption be sure to evaluate and verify the product mounting it in your product.

(2) We take no responsibility for troubles caused by the product usage that is not specified in this catalog. Be sure to exchange the delivery specification with us.

(3) Use fail-safe design and ensure safety by carrying out the following items in cases where it is forecast that the failure of the product gives serious damage to something important like human life, for instant in traffic transportation equipment (trains, cars, traffic signal equipment, etc.), medical equipment, aerospace equipment, electric heating appliances, combustion and gas equipment, rotating equipment, disaster and crime preventive equipment.

*Ensure safety as the system by setting protective circuits and protective equipment.

*Ensure safety as the system by setting such redundant circuits as do not cause danger by a single failure.

(4) When a dogma shall be occurred about safety for this product, be sure to inform us rapidly, operate your technical examination.

(5) The product is designed to use in general standard applications of general electric equipment (AV products, household electric appliances, office equipment, information and communication equipment, etc.); hence, it do not take the use under the following special environments into consideration.

Accordingly, the use in the following special environments, and such environmental conditions may affect the performance of the product; prior to use, verify the performance, reliability, etc. thoroughly.

1) Use in liquids such as water, oil, chemical, and organic solvent.
2) Use under direct sunlight, in outdoor or in dusty atmospheres.
3) Use in places full of corrosive gases such as sea breeze, Cl_2, H_2S, NH_3, SO_2, and NO_X.
4) Use in environment with large static electricity or strong electromagnetic waves.
5) Where the product is close to a heating component, and where an inflammable such as a polyvinyl chloride wire is arranged close to the product.
6) Where the resistor is sealed or coated with resin, etc.
7) Where water or a water-soluble detergent is used in cleaning free soldering and in flux cleaning after soldering (Pay particular attention to soluble flux.)

(6) If transient load (heavy load in a short time) like pulse is expected to be applied, carry out evaluation and confirmation test with resistors actually mounted on your own board. When the load of more than rated power is applied under the load condition at steady state, it may impair performance and/or reliability of resistor. Never exceed the rated power. When

the product shall be used under special condition, be sure to ask us in advance.

(7) Halogen type (Chlorine type, Bromine type, etc.) or other high-activity flux is not recommended as the residue may affect performance or reliability of resistors.

(8) When soldering with soldering iron, never touch the body of the chip resistor with a tip of the soldering iron. When using a soldering iron with a tip at high temperature, solder for a time as short as possible. (three seconds or less up to 350 deg.C)

(9) Avoid physical shock to the resistor and nipping of the resistor with hard tool (a pair of pliers or tweezers) as it may damage protective film or the body of resistor and may affect resistor's performance.

(10) Avoid immersion of chip resistor in solvent for long time. Use solvent after the effect of immersion is confirmed.

12. Storage Method

If the product is stored in the following environments and conditions, the performance and solderability may be badly affected, avoid the storage in the following environments.

(1) Storage in places full of corrosive gases such as sea breeze, Cl_2, H_2S, NH_3, SO_2, and NO_X.

(2) Storage in places exposed to direct sunlight.

(3) Storage in places outside the temperature range of 5 deg.C to 35 deg.C and humidity range of 45 %RH to 85 %RH.

(4) The period of guarantee for performance such as solderability is 1 year after our delivery; and this condition applies only to the case where the storage method specified in item 3) has been followed.

13. Laws and Regulations

(1) This product has not been manufactured with any ozone-depleting chemical controlled under the Montreal Protocol.

(2) All materials used in this part are registered material under the Law Concerning the Examination and Regulation of Manufacturs, etc. of Chemical substances.

(3) All the materials used in this part contain no brominated materials of $PBBO_S$ or PBB_S as the flame-retardant.

(4) If you need the notice by letter of "A preliminary judgement on the Laws of Japan foreign exchange and Foreign Trade control", be sure to let us know.

Subject		Spec. No.
Chip Resistor	PRODUCT SPECIFICATION FOR IMFORMATION	151-SRJ-E7049B
Part No.		
	ERJ1TYF	14 - 11

14. Receipt and Valid time limit for Product Specification for Information

(1) Be sure to return a copy to our company after stamping your company acceptance.
If you shall not return a copy by 3 months which a valid time limit of listing shall expire, we judge that you shall receive this specification.

(2) By 3 months that a valid time limit of listing shall expire, if there shall not offering it by letter, a valid time limit shall continue every 1 year.
If an alteration shall be done on the way futher more, a former specification shall become invalid.

15. Production site

* Country : Japan
  Plant : Fukui Matsushita Electric Co.,Ltd.
* Country : Malaysia
  Plant : Matsushita Electronic Device (M) Sdn. Bhd. <MEDEM>
* Country : China
  Plant : Tianjin Matsushita Electronic Components Co.,Ltd. <TMCOM>

Subject		Spec. No.
Chip Resistor	PRODUCT SPECIFICATION FOR IMFORMATION	151-SRJ-E7049B
Part No.		
	ERJ1TYF	14 - 12

16. Taped and Reel Package

16-1 Physical Dimensions

Structure and reel dimensions shall be as shown in the figure below.

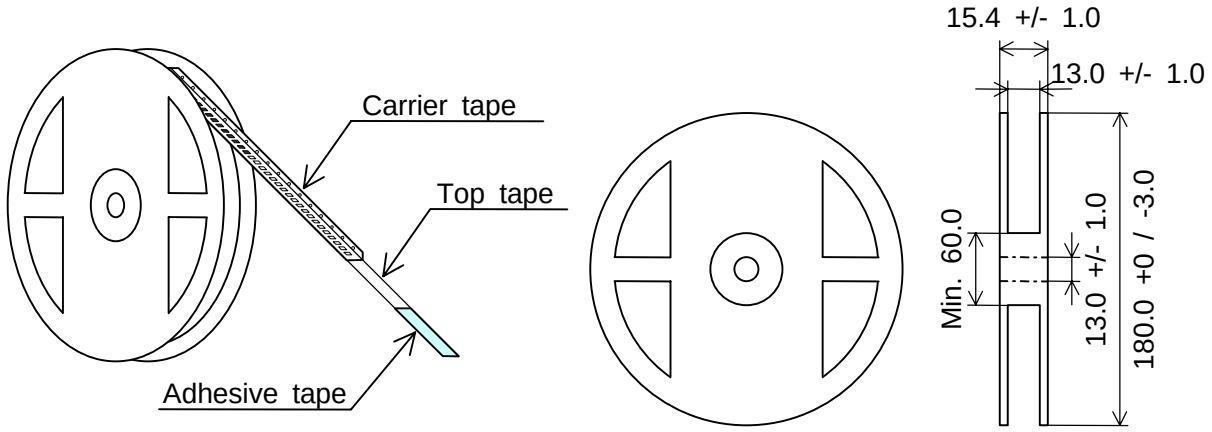

16-2 Carrier tape dimension

Unit : mm

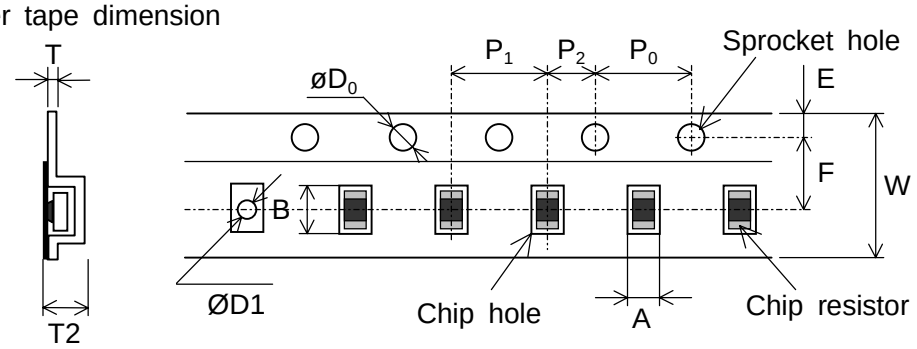

	A	B	W	F	E	P1
Dimension (mm)	3.60+/-0.20	6.90+/-0.20	12.0+/-0.30	5.50+/-0.05	1.75+/-0.10	4.00+/-0.10

	P2	P0	øD0	T	øD1	T2
Dimension (mm)	2.00+/-0.05	4.00+/-0.10	1.50+0.10/-0	Max. 0.40	Min. 1.50	1.10+/-0.10

16-3 Specifications

16-3-1 Taping

(1) Minimum Bending Radius

When Carrier tape shall be bent by Minimum Bending Radius (15mm), no defection of chip and no break of carrier tape. However minimum bending radius shall be tested for 1 time.

(2) Resistance to climate

When resistors shall be exposed at 60 deg.C, 90 to 95 %RH for 120 hours, no defection of chip and no break of carrier tape.

When the top tape shall be peeled tape should not have flash and tear.

Subject		Spec. No.
Chip Resistor	PRODUCT SPECIFICATION FOR IMFORMATION	151-SRJ-E7049B
Part No.		
	ERJ1TYF	14 - 13

(3) When the test shall be operated with the below conditions, peel strength should be 0.098 N to 0.686 N (10 to 70 g), should not have flash and tear after peeling.

(Test Method)

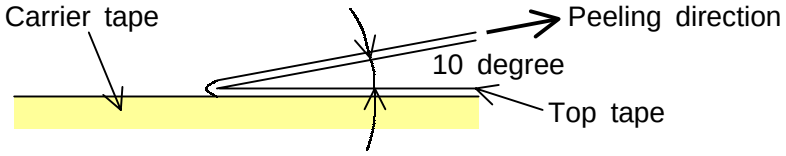

16-3-2 Quantity in Taping : 4000 pcs./reel

16-3-3 Tape packaging

(1) Resistance side shall be facing upward.

(2) Chip resistor array shall not be sticking to top tape and bottom tape.

(3) Chip resistor array shall be easy to take out from carrier tape and chip hole or sprocket hole shall not have flash and break.

16-4 Outer Packaging

Quantity : 15 reels (Max. 60,000pcs.)

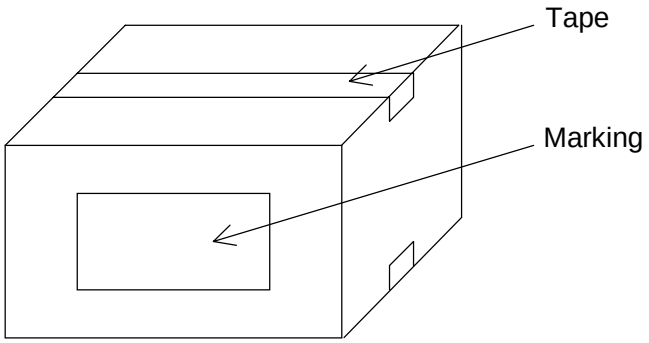

* When taping shall not reach Max. or quantity, the remaining empty space shall be buried with buffer material.

* When the quantity shall be few, alternative packaging methods may be used. No problem must occur during the exportation of the product.

16-5 Marking

At last, production country is displayed in English.

(1) Side of reel (Marking shall be on one side)

1)Part name, 2)Part number, 3)Quantity, 4)Lot number, 5)Maker name

6) Poduction country

(2)Packaging box

1)Customer name, 2)Part name, 3)Part number, 4)Customer part number, 5)Quantity
6)Maker name, 7)Poduction country

Subject		Spec. No.
Chip Resistor	PRODUCT SPECIFICATION FOR IMFORMATION	151-SRJ-E7049B
Part No.		
ERJ1TYF		14 - 14

17. Appearance Quality Criteria

Item	Figure	Appearance quality criteria	Remark
Protective coating Chipping	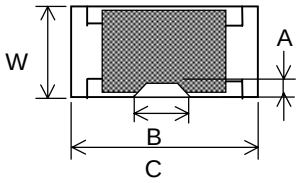	A≤W/4 B≤C/2	Chipping on both sides shall be considered defective
Terminal Chipping	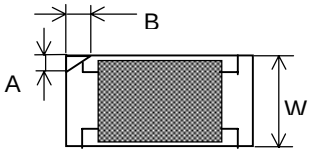	A≤W/4 B≤Terminal width	
Pin hole	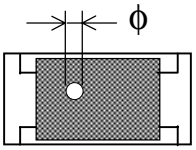	One pin hole / chip resistor ϕ ≤ 0.2 mm	Pin hole penetrates The resistive material.
Flash	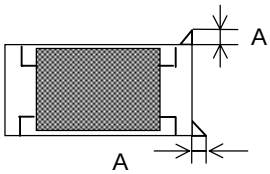	A≤0.1 mm	
Top terminal Lacking	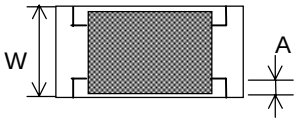	A≤W/4	
Side terminal Lacking	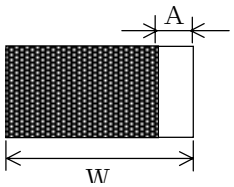	A≤W/4	
Protective coating and terminal aberration	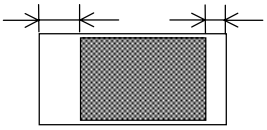	Protective coating and terminal aberration shall be within the terminal width dimension	
Marking	———————	Marking must be readable.	