Excellent Integrated System Limited

Stocking Distributor

Click to view price, real time Inventory, Delivery & Lifecycle Information:

Omron
B3W-4000S

For any questions, you can email us directly:
sales@integrated-circuit.com

OMRON

Tactile Switch
B3W

Tactile Switch with Sealed Construction for Automatic Soldering

- Available in two sizes:
  6 mm square and 12 mm square
- Dome-shaped contact mechanism assures short key stroke and a sharp click to confirm actuation
- Ground terminal available to protect against static electricity
- Ideal for applications such as audio, office and communications equipment, measuring instruments, industrial robots, VCRs, TVs, and vending machines
- Stick packaging style available
- Sealed for CFC (Freon) cleaning
- RoHS Compliant

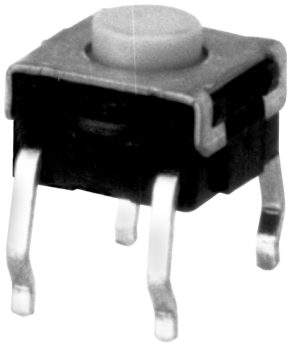

Ordering Information

Type	Plunger	Switch height x pitch	Operating force	Part number			
				Without ground terminal		With ground terminal	
				Bags	Sticks*	Bags	Sticks*
Standard **6x6 mm**	Flat	4.3 x 6.5 mm	General-purpose: 160 g	**B3W-1000**	**B3W-1000S**	**B3W-1100**	**B3W-1100S**
			High-force: 230 g	**B3W-1002**	**B3W-1002S**	**B3W-1102**	**B3W-1102S**
	Projected	7.3 x 6.5 mm	General-purpose: 160 g	**B3W-1050**	**B3W-1050S**	**B3W-1150**	**B3W-1150S**
			High-force: 230 g	**B3W-1052**	**B3W-1052S**	**B3W-1152**	**B3W-1152S**
Standard **12x12mm**	Flat	4.3 x 6.5 mm	General-purpose: 200 g	**B3W-4000**	**B3W-4000S**	**B3W-4100**	**B3W-4100S**
			High-force: 350 g	**B3W-4005**	**B3W-4005S**	**B3W-4105**	**B3W-4105S**
	Projected	7.3 x 6.5 mm	General-purpose: 200 g	**B3W-4050**	**B3W-4050S**	**B3W-4150**	**B3W-4150S**
			High-force: 350 g	**B3W-4055**	**B3W-4055S**	**B3W-4155**	**B3W-4155S**

* Number of switches per stick:

6 x 6 mm	Without ground terminal	....80/stick
	With ground terminal	.....75/stick
12 x 12 mm	Without ground terminal	....45/stick
	With ground terminal	.....40/stick

Important Note: Switches cannot be water-washed.

■ Accessories

See “B32” Tactile Switch Key Top data sheet for keycaps that fit projected plunger B3W models.

Plunger Identification Table

Use this table to determine keyswitch type by plunger color.

Plunger color	Operating force	Type
White	160 g	**B3W-1000, 1050, 1100, 1150**
White	200 g	**B3W-4000, 4050, 4100, 4150**
Yellow	230 g	**B3W-1002, 1052, 1102, 1152**
Yellow	350 g	**B3W-4005, 4055, 4105, 4155**

Specifications

■ Characteristics

Switching capacity		50 mA 24 VDC (resistive load)	
Contact form		SPST-NO	
Permissible load		1 mA 5 VDC min. (resistive load)	
Contact resistance		100 MΩ max.	
Insulation resistance		100 MΩ min. (at 250 VDC)	
Dielectric strength		500 VAC, 50/60 Hz for 1 minute	
Bounce time		5 ms max.	
Vibration	Malfunction durability	10 to 55 Hz, 1.5-mm double amplitude	
Shock	Destruction durability	1,000 m/s^2 (approx. 100 G)	
	Malfunction durability	100 m/s^2 (approx. 10 G)	
Ambient temperature		-25° to 70°C	
Humidity		35% to 85% RH	
Service life [mechanical/electrical]	General-purpose type	B3W-1□□□ : 1,000,000 operations min.	B3W-4□□□ : 3,000,000 operations min.
	High-load type	300,000 operations min.	1,000,000 operations min.
Weight		B3W-1□□□ : Approx. 0.30 g	B3W-4□□□ : Approx. 1.00 g

OMRON

■ Operating Characteristics

Characteristics	Part number			
	B3W-1□□□		B3W-4□□□	
	General-purpose	High-force	General-purpose	High-force
Operating force (OF) max.	160 g	230 g	200 g	350 g
Release force (RF) min.	20 g	50 g	30 g	50 g
Pretravel (PT)	$0.25\ ^{+0.2}/_{-0.1}$ mm	$0.25\ ^{+0.2}/_{-0.1}$ mm	$0.3\ ^{+0.2}/_{-0.1}$ mm	$0.3\ ^{+0.2}/_{-0.1}$ mm

■ Construction

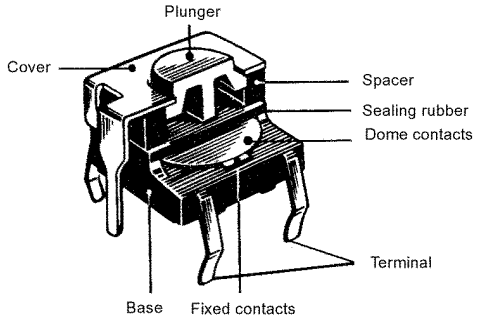

Engineering Data

■ Operating Force vs. Stroke (Typical Example)

B3W-1□□□ series

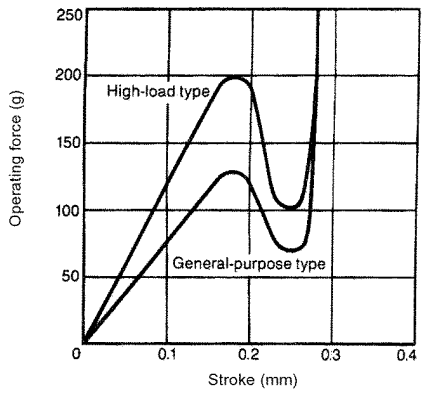

B3W-4□□□ series

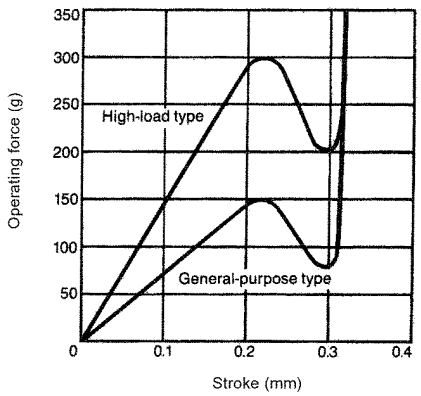

Dimensions

Unit: mm (inch)

■ 6 mm Square Types

B3W-1000, B3W-1002

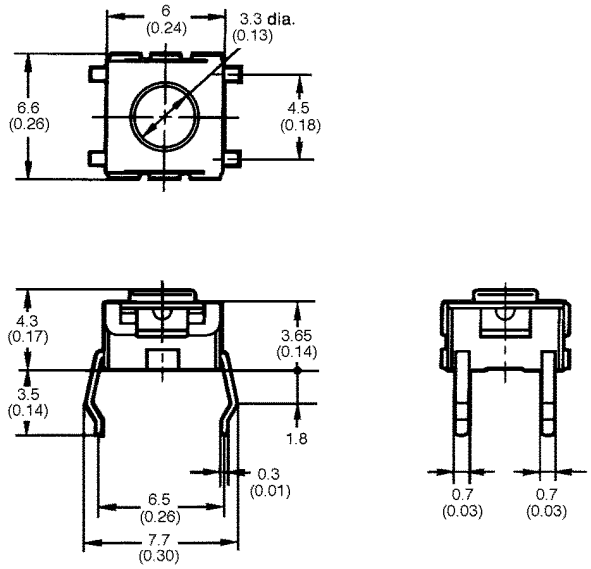

B3W-1100, B3W-1102

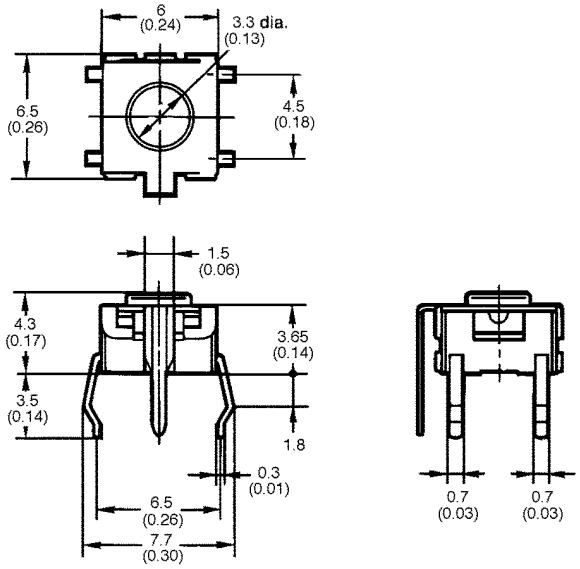

Mounting holes in PCB (top view)

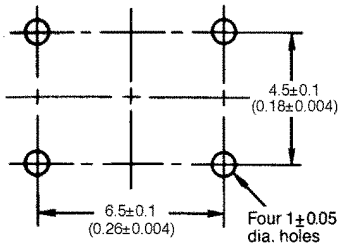

Terminal arrangement/ Internal connection (top view)

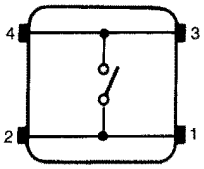

Mounting holes in PCB (top view)

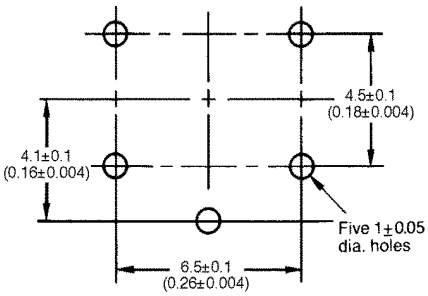

Terminal arrangement/ Internal connection (top view)

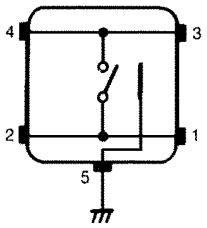

Note: Unless otherwise specified, a tolerance of ± 0.2 mm applies to all dimensions.

OMRON

■ 6 mm Square Types

B3W-1050, B3W-1052

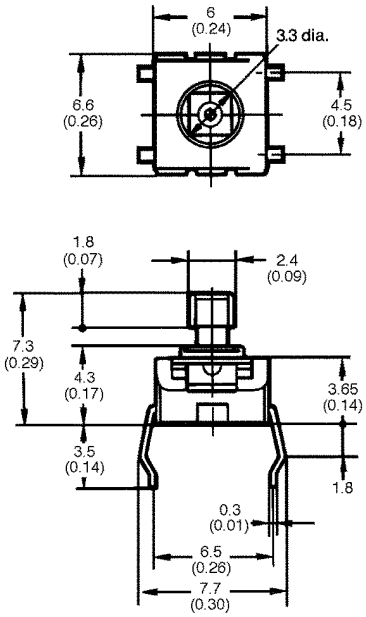

B3W-1150, B3W-1152

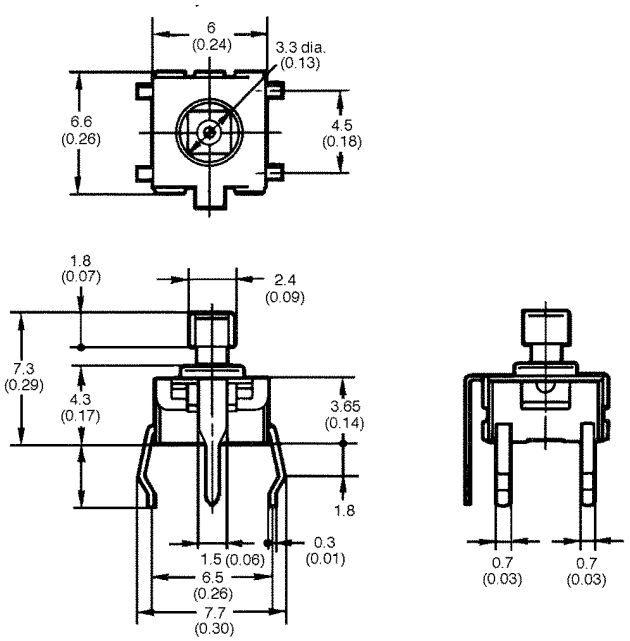

Mounting holes in PCB (top view)

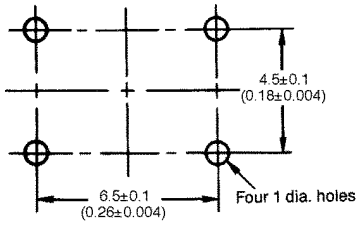

Terminal arrangement/ Internal connection (top view)

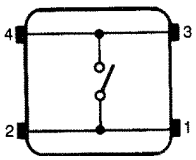

Mounting holes in PCB (top view)

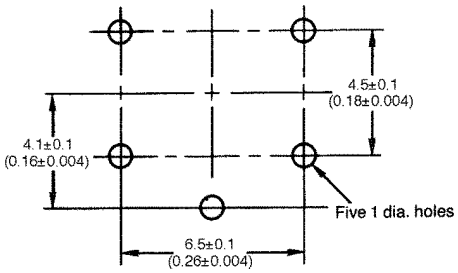

Terminal arrangement/ Internal connection (top view)

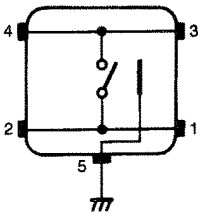

Note: Unless otherwise specified, a tolerance of ± 0.2 mm applies to all dimensions.

Unit: mm (inch)

■ 12 mm Square Types

B3W-4000, B3W-4005

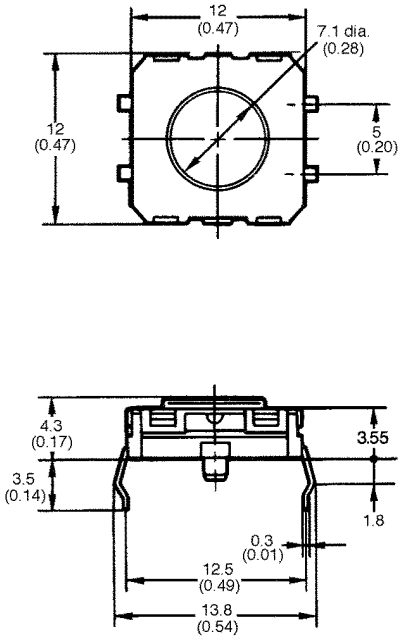

B3W-4100, B3W-4105

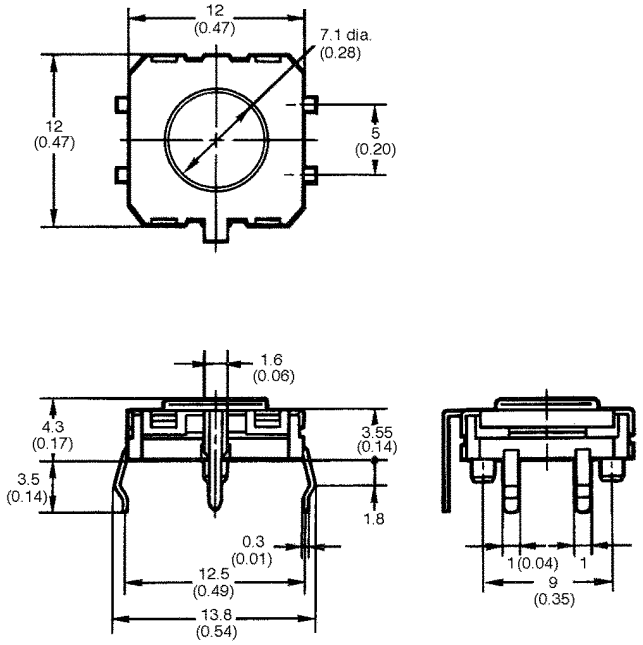

Mounting holes in PCB (top view)

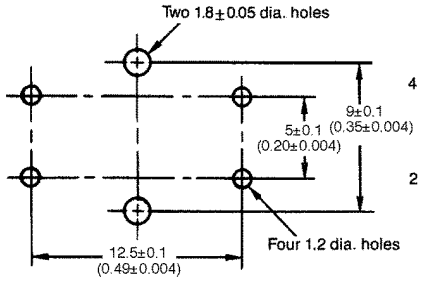

Terminal arrangement/ Internal connection (top view)

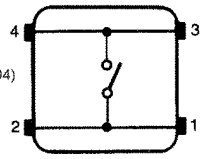

Mounting holes in PCB (top view)

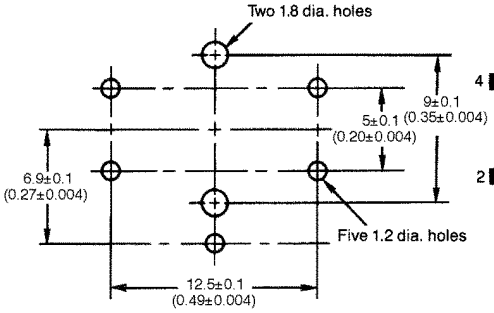

Terminal arrangement/ Internal connection (top view)

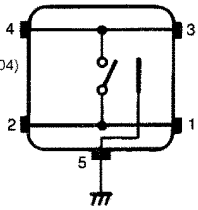

Note: Unless otherwise specified, a tolerance of ± 0.2 mm applies to all dimensions.

OMRON

■ 12 mm Square Types

B3W-4050, B3W-4055

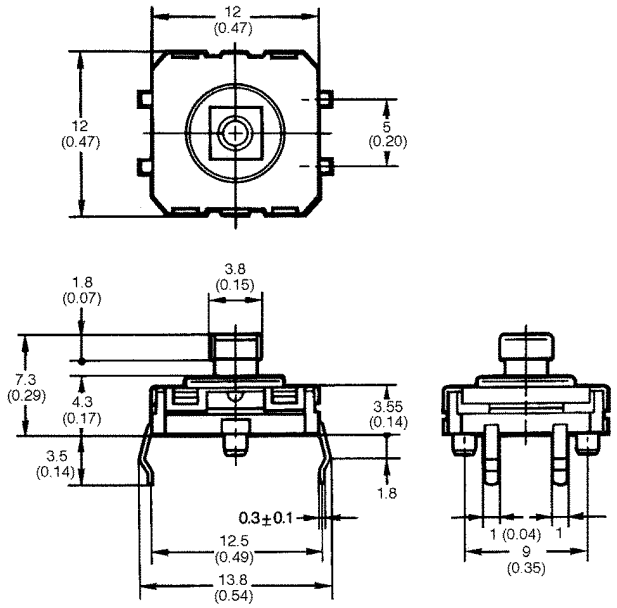

B3W-4150, B3W-4155

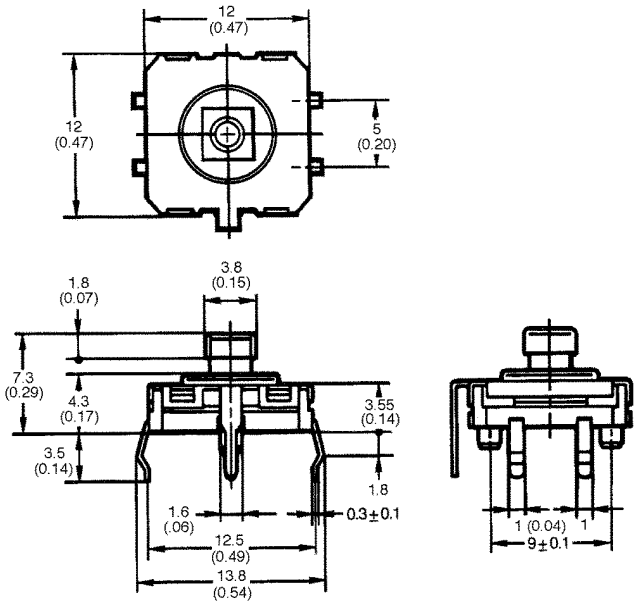

Mounting holes in PCB (top view)

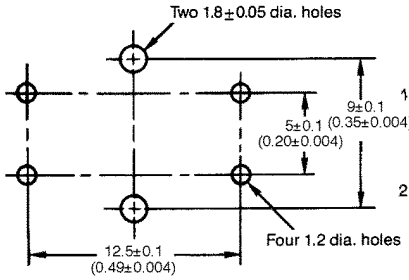

Terminal arrangement/ Internal connection (top view)

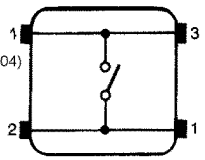

Mounting holes in PCB (top view)

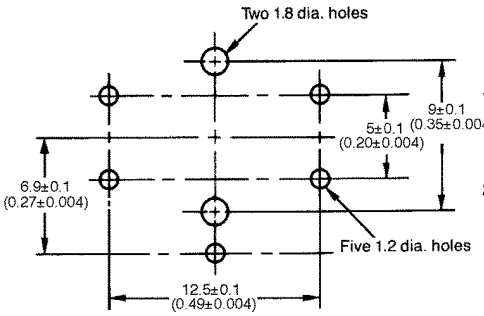

Terminal arrangement/ Internal connection (top view)

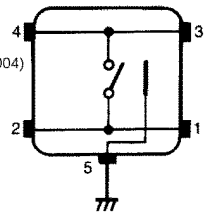

Note: Unless otherwise specified, a tolerance of ± 0.2 mm applies to all dimensions.

MEMO

OMRON

Terms and Conditions of Sale

1. Offer; Acceptance. These terms and conditions (these "Terms") are deemed part of all quotations, acknowledgments, invoices, purchase orders and other documents, whether electronic or in writing, relating to the sale of products or services (collectively, the "Products") by Omron Electronic Components LLC ("Seller"). Seller hereby objects to any terms or conditions proposed in Buyer's purchase order or other documents which are inconsistent with, or in addition to, these Terms.
2. Prices; Payment. All prices stated are current, subject to change without notice by Seller. Buyer agrees to pay the price in effect at time of shipment. Payments for Products received are due net 30 days unless otherwise stated in the invoice.
3. Discounts. Cash discounts, if any, will apply only on the net amount of invoices sent to Buyer after deducting transportation charges, taxes and duties, and will be allowed only if (i) the invoice is paid according to Seller's payment terms and (ii) Buyer has no past due amounts owing to Seller.
4. Currencies. If the prices quoted herein are in a currency other than U.S. dollars, Buyer shall make remittance to Seller at the then current exchange rate most favorable to Seller and which is available on the due date; provided that if remittance is not made when due, Buyer will convert the amount to U.S. dollars at the then current exchange rate most favorable to Seller available during the period between the due date and the date remittance is actually made.
5. Governmental Approvals. Buyer shall be responsible for, and shall bear all costs involved in, obtaining any government approvals required for the importation or sale of the Products.
6. Taxes. All taxes, duties and other governmental charges (other than general real property and income taxes), including any interest or penalties thereon, imposed directly or indirectly on Seller or required to be collected directly or indirectly by Seller for the manufacture, production, sale, delivery, importation, consumption or use of the Products sold hereunder (including customs duties and sales, excise, use, turnover and license taxes) shall be charged to and remitted by Buyer to Seller.
7. Financial. If the financial position of Buyer at any time becomes unsatisfactory to Seller, Seller reserves the right to stop shipments or require satisfactory security or payment in advance. If Buyer fails to make payment or otherwise comply with these Terms or any related agreement, Seller may (without liability and in addition to other remedies) cancel any unshipped portion of Products sold hereunder and stop any Products in transit until Buyer pays all amounts, including amounts payable hereunder, whether or not then due, which are owing to it by Buyer. Buyer shall in any event remain liable for all unpaid accounts.
8. Cancellation; Etc. Orders are not subject to rescheduling or cancellation unless Buyer indemnifies Seller fully against all costs or expenses arising in connection therewith.
9. Force Majeure. Seller shall not be liable for any delay or failure in delivery resulting from causes beyond its control, including earthquakes, fires, floods, strikes or other labor disputes, shortage of labor or materials, accidents to machinery, acts of sabotage, riots, delay in or lack of transportation or the requirements of any government authority.
10. Shipping; Delivery. Unless otherwise expressly agreed in writing by Seller:
    1. Shipments shall be by a carrier selected by Seller;
    2. Such carrier shall act as the agent of Buyer and delivery to such carrier shall constitute delivery to Buyer;
    3. All sales and shipments of Products shall be FOB shipping point (unless otherwise stated in writing by Seller), at which point title to and all risk of loss of the Products shall pass from Seller to Buyer, provided that Seller shall retain a security interest in the Products until the full purchase price is paid by Buyer;
    4. Delivery and shipping dates are estimates only.
    5. Seller will package Products as it deems proper for protection against normal handling and extra charges apply to special conditions.
11. Claims. Any claim by Buyer against Seller for shortage or damage to the Products occurring before delivery to the carrier must be presented in writing to Seller within 30 days of receipt of shipment and include the original transportation bill signed by the carrier noting that the carrier received the Products from Seller in the condition claimed.
12. Warranties. (a) Exclusive Warranty. Seller's exclusive warranty is that the Products will be free from defects in materials and workmanship for a period of twelve months from the date of sale by Seller (or such other period expressed in writing by Seller). Seller disclaims all other warranties, express or implied. (b) Limitations. SELLER MAKES NO WARRANTY OR REPRESENTATION, EXPRESS OR IMPLIED, ABOUT NON-INFRINGEMENT, MERCHANTABILITY OR FITNESS FOR A PARTICULAR PURPOSE OF THE PRODUCTS. BUYER ACKNOWLEDGES THAT IT ALONE HAS DETERMINED THAT THE PRODUCTS WILL SUITABLY MEET THE REQUIREMENTS OF THEIR INTENDED USE. Seller further disclaims all warranties and responsibility of any type for claims or expenses based on infringement by the Products or otherwise of any intellectual property right. (c) Buyer Remedy. Seller's sole obligation hereunder shall be to replace (in the form originally shipped with Buyer responsible for labor charges for removal or replacement thereof) the non-complying Product or, at Seller's election, to repay or credit Buyer an amount equal to the purchase price of the Product; provided that in no event shall Seller be responsible for warranty, repair, indemnity or any other claims or expenses regarding the Products unless Seller's analysis confirms that the Products were properly handled, stored, installed and maintained and not subject to contamination, abuse, misuse or inappropriate modification. Return of any Products by Buyer must be approved in writing by Seller before shipment. Seller shall not be liable for the suitability or unsuitability or the results from the use of Products in combination with any electrical or electronic components, circuits, system assemblies, or any other materials or substances or environments. Any advice, recommendations or information given orally or in writing are not to be construed as an amendment or addition to the above warranty.
13. Limitation on Liability; Etc. SELLER SHALL NOT BE LIABLE FOR SPECIAL, INDIRECT, INCIDENTAL OR CONSEQUENTIAL DAMAGES, LOSS OF PROFITS OR PRODUCTION OR COMMERCIAL LOSS IN ANY WAY CONNECTED WITH THE PRODUCTS, WHETHER SUCH CLAIM IS BASED IN CONTRACT, WARRANTY, NEGLIGENCE OR STRICT LIABILITY. Further, in no event shall liability of Seller exceed the individual price of the Product on which liability is asserted.
14. Indemnities. Buyer shall indemnify and hold harmless Seller, its affiliates and its employees from and against all liabilities, losses, claims, costs and expenses (including attorney's fees and expenses) related to any claim, investigation, litigation or proceeding (whether or not Seller is a party) which arises or is alleged to arise from Buyer's acts or omissions under these Terms or in any way with respect to the Products. Without limiting the foregoing, Buyer (at its own expense) shall indemnify and hold harmless Seller and defend or settle any action brought against Seller to the extent that it is based on a claim that any Product made to Buyer specifications infringed intellectual property rights of another party.
15. Property; Confidentiality. The intellectual property embodied in the Products is the exclusive property of Seller and its affiliates and Buyer shall not attempt to duplicate it in any way without the written permission of Seller. Notwithstanding any charges to Buyer for engineering or tooling, all engineering and tooling shall remain the exclusive property of Seller. All information and materials supplied by Seller to Buyer relating to the Products are confidential and proprietary, and Buyer shall limit distribution thereof to its trusted employees and strictly prevent disclosure to any third party.
16. Miscellaneous. (a) Waiver. No failure or delay by Seller in exercising any right and no course of dealing between Buyer and Seller shall operate as a waiver of rights by Seller. (b) Assignment. Buyer may not assign its rights hereunder without Seller's written consent. (c) Law. These Terms are governed by Illinois law (without regard to conflict of law principles). Federal and state courts in Illinois shall have exclusive jurisdiction for any dispute hereunder. (d) Amendment. These Terms constitute the entire agreement between Buyer and Seller relating to the Products, and no provision may be changed or waived unless in writing signed by the parties. (e) Severability. If any provision hereof is rendered ineffective or invalid, such provision shall not invalidate any other provision. (f) Setoff. Buyer shall have no right to set off any amounts against the amount owing in respect of this invoice.. (g) Definitions. As used herein, "including" means "including without limitation".

Distributor of Omron: Excellent Integrated System Limited
Datasheet of B3W-4000S - SWITCH TACTILE SPST-NO 0.05A 24V
Contact us: sales@integrated-circuit.com Website: www.integrated-circuit.com

OMRON

Certain Precautions on Specifications and Use

1. Suitability for Use. Seller shall not be responsible for conformity with any standards, codes or regulations which apply to the combination of the Product in Buyer's application or use of the Product. At Buyer's request, Seller will provide applicable third party certification documents identifying ratings and limitations of use which apply to the Product. This information by itself is not sufficient for a complete determination of the suitability of the Product in combination with the end product, machine, system, or other application or use. Buyer shall be solely responsible for determining appropriateness of the particular Product with respect to Buyer's application, product or system. Buyer shall take application responsibility in all cases but the following is a non-exhaustive list of applications for which particular attention must be given:
   (i) Outdoor use, uses involving potential chemical contamination or electrical interference, or conditions or uses not described in this document.
   (ii) Energy control systems, combustion systems, railroad systems, aviation systems, medical equipment, amusement machines, vehicles, safety equipment, and installations subject to separate industry or government regulations.
   (iii) Use in consumer products or any use in significant quantities.
   (iv) Systems, machines and equipment that could present a risk to life or property. Please know and observe all prohibitions of use applicable to this product.

   NEVER USE THE PRODUCT FOR AN APPLICATION INVOLVING SERIOUS RISK TO LIFE OR PROPERTY WITHOUT ENSURING THAT THE SYSTEM AS A WHOLE HAS BEEN DESIGNED TO ADDRESS THE RISKS, AND THAT THE OMRON PRODUCT IS PROPERLY RATED AND INSTALLED FOR THE INTENDED USE WITHIN THE OVERALL EQUIPMENT OR SYSTEM.
2. Programmable Products. Seller shall not be responsible for the user's programming of a programmable product, or any consequence thereof.
3. Performance Data. Performance data given in this publication is provided as a guide for the user in determining suitability and does not constitute a warranty. It may represent the result of Seller's test conditions, and the users must correlate it to actual application requirements. Actual performance is subject to Seller's Warranty and Limitations of Liability.
4. Change in Specifications. Product specifications and accessories may be changed at any time based on improvements and other reasons. It is our practice to change part numbers when published ratings or features are changed or when significant construction changes are made. However, some specifications of the Product may be changed without any notice. When in doubt, special part numbers may be assigned to fix or establish key specifications for your application. Please consult with your Seller representative at any time to confirm actual specifications of purchased Product.
5. Errors and Omissions. The information in this publication has been carefully checked and is believed to be accurate; however, no responsibility is assumed for clerical, typographical or proofreading errors, or omissions.
6. RoHS Compliance. Where indicated, our products currently comply, to the best of our knowledge as of the date of this publication, with the requirements of the European Union's Directive on the Restriction of certain Hazardous Substances ("RoHS"), although the requirements of RoHS do not take effect until July 2006. These requirements may be subject to change. Please consult our website for current information.

Complete "Terms and Conditions of Sale" for product purchase and use are on Omron's website at www.components.omron.com – under the "About Us" tab, in the Legal Matters section.

ALL DIMENSIONS SHOWN ARE IN MILLIMETERS.
To convert millimeters into inches, multiply by 0.03937. To convert grams into ounces, multiply by 0.03527.

OMRON

OMRON ELECTRONIC COMPONENTS LLC
55 E. Commerce Drive, Suite B
Schaumburg, IL 60173
847-882-2288

OMRON CANADA, INC.
885 Milner Avenue
Toronto, Ontario M1B 5V8
416-286-6465

OMRON ON-LINE
Global - http://www.omron.com
USA - http://www.components.omron.com
Canada - http://www.omron.ca

Cat. No. JB301-E3-01 3/05 Specifications subject to change without notice Printed in USA