Excellent Integrated System Limited

Stocking Distributor

Click to view price, real time Inventory, Delivery & Lifecycle Information:

Staco Energy Products Co.
3PN1010BA

For any questions, you can email us directly:
sales@integrated-circuit.com

SIZE	DWG. NO.
D	031–1650

REVISIONS

SYM.	E.C.N.	DATE	APVD.
A	24536	3/12/01	
	REVISED SILKSCREEN		

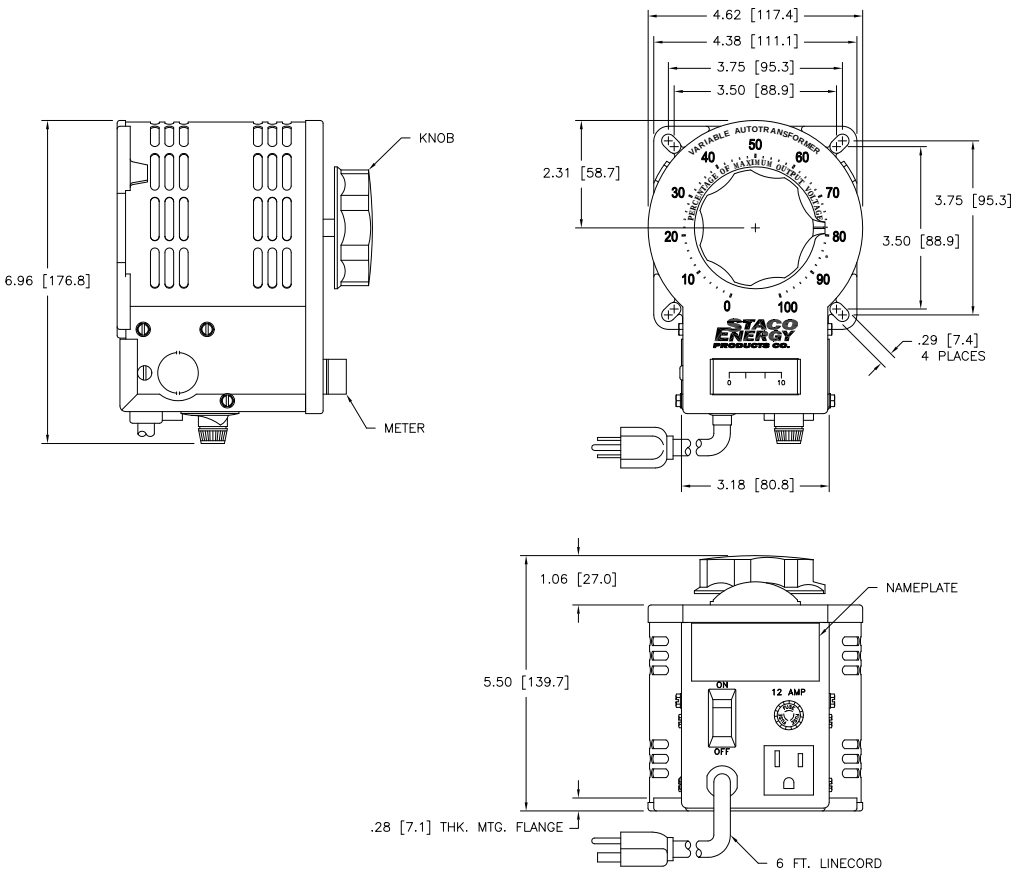

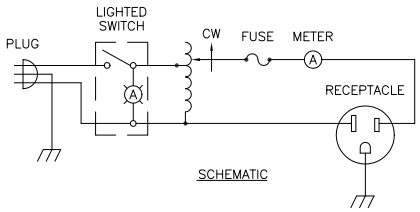

SCHEMATIC

SPECIFICATIONS					
	INPUT		OUTPUT		
WIRING	VOLTS	HERTZ	VOLTS	CONSTANT CURRENT LOAD	
				MAX. AMPS	MAX. KVA
SINGLE PHASE	120	50/60	0–140	10	1.4

UNLESS OTHERWISE SPECIFIED, TOLERANCE IS ± DECIMALS .XX ±.03 .XXX ±.010 .XXXX ±.0005 ANGLES ±1° DRAFT 1–1/2°

MATERIAL

UNITS IN [mm]

ALL DIMENSIONS APPLY AFTER PLATING

The information and design disclosed herein was originated by and is the property of STACO ENERGY PRODUCTS CO., which reserves all patent, proprietary, design, manufacturing, reproduction, use and sales rights thereto, and to any article disclosed therein, except to the extent expressly granted in writing to others. The foregoing does not apply to vendor proprietary parts.

TITLE: SPEC. CONTROL DRAWING VARIABLE TRANSFORMER MODEL: 3PN1010BA

STACO ENERGY PRODUCTS CO.
4424 Sepulveda Boulevard, Culver City, California 90230

DRAWN BY	DATE	PART USED ON	DO NOT SCALE DWG.
S.A. SMITH	10/10/96	3PN1010BA	
CHECKED	DATE	WEIGHT APPROX. 10.25 LBS	CAGE CODE 83008
ENGINEER	DATE	SCALE 1=1	SHEET 1 OF 1

SIZE D DWG. NO. 031–1650