Excellent Integrated System Limited

Stocking Distributor

Click to view price, real time Inventory, Delivery & Lifecycle Information:

EPCOS (TDK)
B88069X2370T502

For any questions, you can email us directly:
sales@integrated-circuit.com

EPCOS

Surge Arrester — A81-A350XG

2-Electrode-Arrester — Ordering code: B88069X2370T502

DC spark-over voltage [1) 2)]	350 ± 20	V %
Impulse spark-over voltage at 100 V/µs - for 99 % of measured values - typical values of distribution at 1 kV/µs - for 99 % of measured values - typical values of distribution	 < 700 < 650 < 900 < 800	 V V V V
Nominal impulse discharge current (wave 8/20 µs) Single impulse discharge current (wave 8/20 µs)	20 25	kA kA
Nominal alternating discharge current (50 Hz, 1 s) Alternating discharge current (50 Hz, 9 cycles)	20 100	A A
Insulation resistance at 100 V_{dc}	> 10	GΩ
Capacitance at 1 MHz	< 1.5	pF
Arc voltage at 1 A Glow to arc transition current Glow voltage	~ 15 ~ 0.5 ~ 60	V A V
Weight	~ 1.5	g
Operation and storage temperature	-40 ... +90	°C
Climatic category (IEC 60068-1)	40/ 90/ 21	
Marking, blue	EPCOS 350 YY O 350 - Nominal voltage YY - Year of production O - Non radioactive	

1) At delivery AQL 0.65 level II, DIN ISO 2859
2) In ionized mode
Terms in accordance with ITU-T Rec. K.12 and DIN 57845/VDE0845

EPCOS

Surge Arrester	A81-A350XG
2-Electrode-Arrester	Ordering code: **B88069X2370T502**

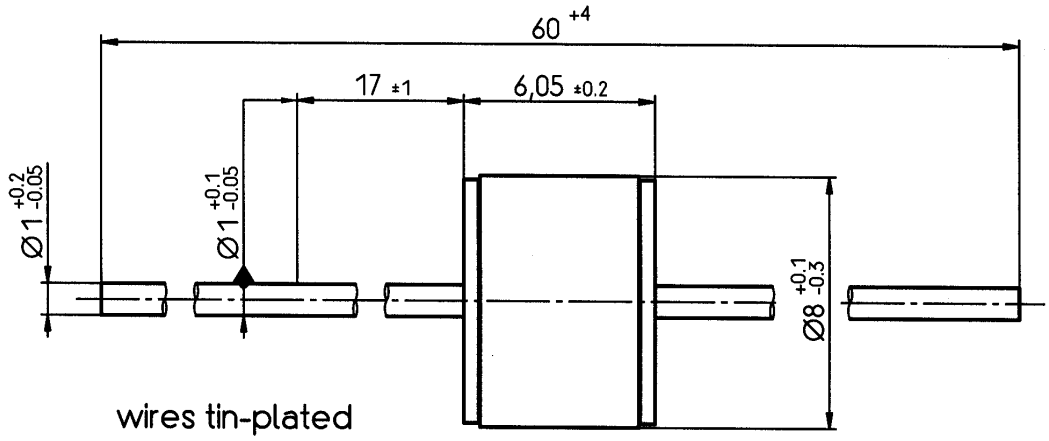

Not to scale

Dimensions in mm

Non controlled document

© EPCOS AG 2002. Reproduction, publication and dissemination of this data sheet, enclosures hereto and the information contained therein without EPCOS' prior express consent is prohibited.

Purchase orders are subject to the General Conditions for the Supply of Products and Services of the Electrical and Electronics Industry recommended by the ZVEI (German Electrical and Electronic Manufacturers' Association), unless otherwise agreed.