Excellent Integrated System Limited

Stocking Distributor

Click to view price, real time Inventory, Delivery & Lifecycle Information:

Texas Instruments
SN74CBTLV16212DLR

For any questions, you can email us directly:
sales@integrated-circuit.com

Distributor of Texas Instruments: Excellent Integrated System Limited
Datasheet of SN74CBTLV16212DLR - IC LV FET BUS-EXCH SW 56-SSOP
Contact us: sales@integrated-circuit.com Website: www.integrated-circuit.com

SN74CBTLV16212
LOW-VOLTAGE 24-BIT FET BUS-EXCHANGE SWITCH

SCDS044I − DECEMBER 1997 − REVISED OCTOBER 2003

- **Member of the Texas Instruments Widebus™ Family**
- **4-Ω Switch Connection Between Two Ports**
- **Rail-to-Rail Switching on Data I/O Ports**
- **I_{off} Supports Partial-Power-Down Mode Operation**
- **Break-Before-Make Feature**
- **Latch-Up Performance Exceeds 100 mA Per JESD 78, Class II**
- **ESD Protection Exceeds JESD 22**
  - **2000-V Human-Body Model (A114-A)**
  - **200-V Machine Model (A115-A)**

DGG, DGV, OR DL PACKAGE
(TOP VIEW)

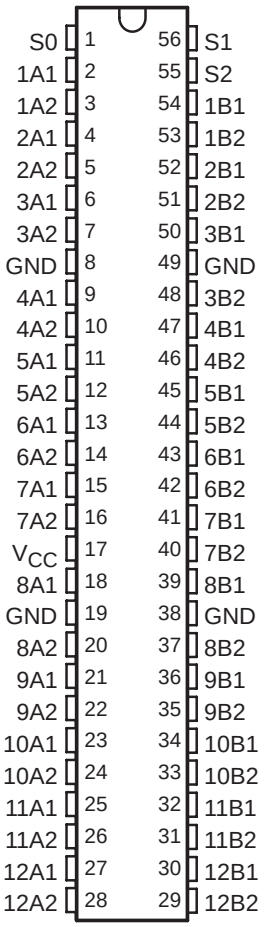

description/ordering information

The SN74CBTLV16212 provides 24 bits of high-speed bus switching or exchanging. The low on-state resistance of the switch allows connections to be made with minimal propagation delay.

The device operates as a 24-bit bus switch or a 12-bit bus exchanger, which provides data exchanging between the four signal ports via the data-select (S0, S1, S2) terminals.

This device is fully specified for partial-power-down applications using I_{off}. The I_{off} feature ensures that damaging current will not backflow through the device when it is powered down. The device has isolation during power off.

The SN74CBTLV16212 is specified by the break-before-make feature to have no through current when switching between B ports.

ORDERING INFORMATION

T_A	PACKAGE†		ORDERABLE PART NUMBER	TOP-SIDE MARKING
−40°C to 85°C	SSOP − DL	Tube	SN74CBTLV16212DL	CBTLV16212
		Tape and reel	SN74CBTLV16212DLR	
	TSSOP − DGG	Tape and reel	SN74CBTLV16212GR	CBTLV16212
	TVSOP − DGV	Tape and reel	SN74CBTLV16212VR	CN212

† Package drawings, standard packing quantities, thermal data, symbolization, and PCB design guidelines are available at www.ti.com/sc/package.

Please be aware that an important notice concerning availability, standard warranty, and use in critical applications of Texas Instruments semiconductor products and disclaimers thereto appears at the end of this data sheet.

Widebus is a trademark of Texas Instruments.

PRODUCTION DATA information is current as of publication date. Products conform to specifications per the terms of Texas Instruments standard warranty. Production processing does not necessarily include testing of all parameters.

Copyright © 2003, Texas Instruments Incorporated

FUNCTION TABLE

INPUTS			INPUTS/OUTPUTS		FUNCTION
S2	S1	S0	A1	A2	
L	L	L	Z	Z	Disconnect
L	L	H	B1	Z	A1 port = B1 port
L	H	L	B2	Z	A1 port = B2 port
L	H	H	Z	B1	A2 port = B1 port
H	L	L	Z	B2	A2 port = B2 port
H	L	H	Z	Z	Disconnect
H	H	L	B1	B2	A1 port = B1 port A2 port = B2 port
H	H	H	B2	B1	A1 port = B2 port A2 port = B1 port

Distributor of Texas Instruments: Excellent Integrated System Limited
Datasheet of SN74CBTLV16212DLR - IC LV FET BUS-EXCH SW 56-SSOP
Contact us: sales@integrated-circuit.com Website: www.integrated-circuit.com

logic diagram (positive logic)

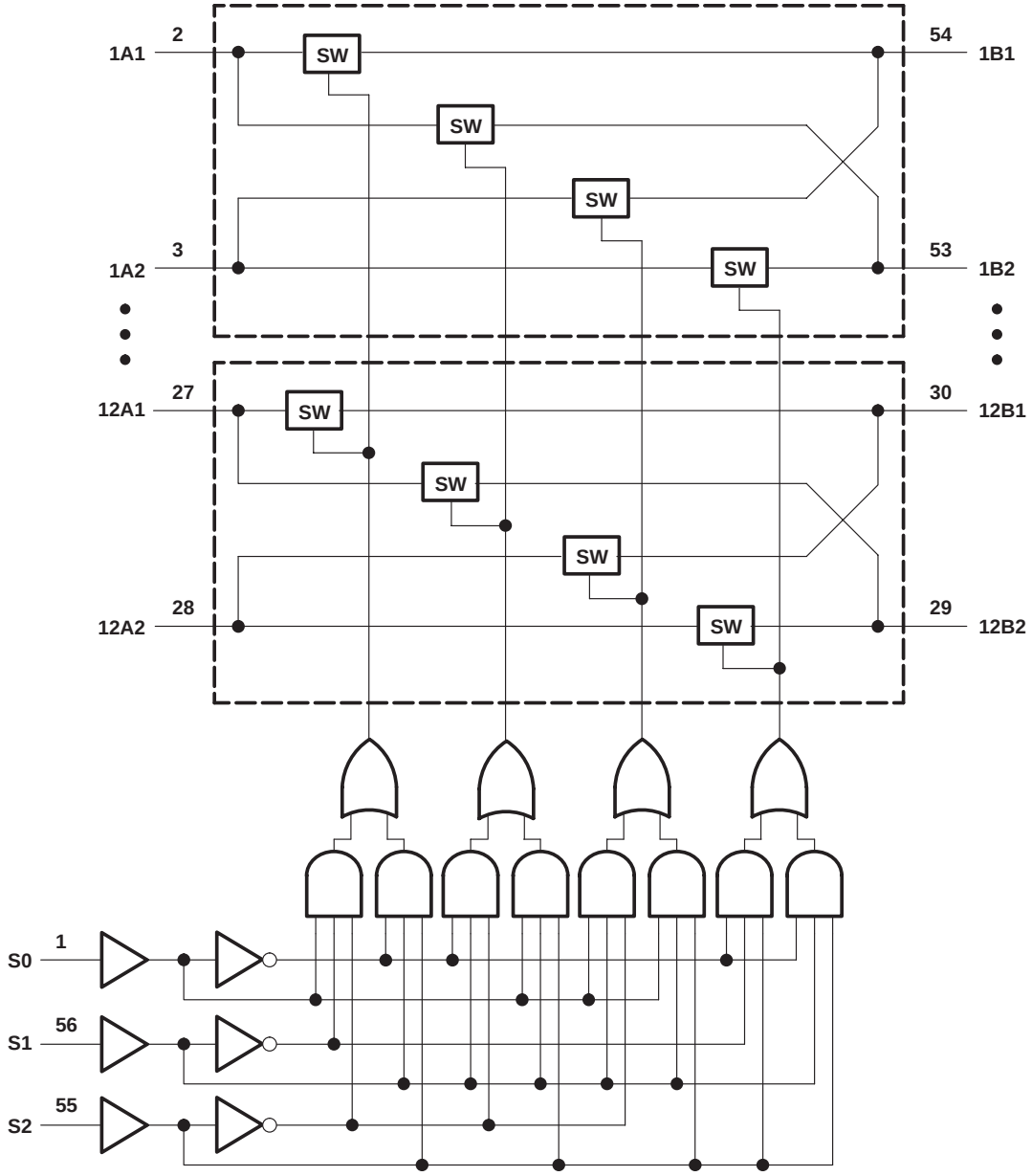

Distributor of Texas Instruments: Excellent Integrated System Limited
Datasheet of SN74CBTLV16212DLR - IC LV FET BUS-EXCH SW 56-SSOP
Contact us: sales@integrated-circuit.com Website: www.integrated-circuit.com

simplified schematic, each FET switch

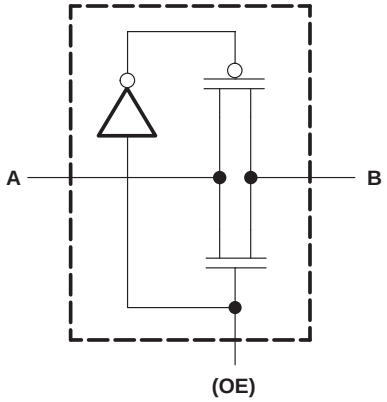

absolute maximum ratings over operating free-air temperature range (unless otherwise noted)†

Supply voltage range, V_{CC} . . . . . −0.5 V to 4.6 V
Input voltage range, V_I (see Note 1) . . . . . −0.5 V to 4.6 V
Continuous channel current . . . . . 128 mA
Input clamp current, I_{IK} ($V_I < 0$) . . . . . −50 mA
Package thermal impedance, θ_{JA} (see Note 2): DGG package . . . . . 64°C/W
DGV package . . . . . 48°C/W
DL package . . . . . 56°C/W
Storage temperature range, T_{stg} . . . . . −65°C to 150°C

† Stresses beyond those listed under “absolute maximum ratings” may cause permanent damage to the device. These are stress ratings only, and functional operation of the device at these or any other conditions beyond those indicated under “recommended operating conditions” is not implied. Exposure to absolute-maximum-rated conditions for extended periods may affect device reliability.

NOTES: 1. The input and output negative-voltage ratings may be exceeded if the input and output clamp-current ratings are observed.
2. The package thermal impedance is calculated in accordance with JESD 51-7.

recommended operating conditions (see Note 3)

			MIN	MAX	UNIT
V_{CC}	Supply voltage		2.3	3.6	V
V_{IH}	High-level control input voltage	V_{CC} = 2.3 V to 2.7 V	1.7		V
		V_{CC} = 2.7 V to 3.6 V	2		
V_{IL}	Low-level control input voltage	V_{CC} = 2.3 V to 2.7 V		0.7	V
		V_{CC} = 2.7 V to 3.6 V		0.8	
T_A	Operating free-air temperature		−40	85	°C

NOTE 3: All unused control inputs of the device must be held at V_{CC} or GND to ensure proper device operation. Refer to the TI application report, *Implications of Slow or Floating CMOS Inputs*, literature number SCBA004.

electrical characteristics over recommended operating free-air temperature range (unless otherwise noted)

PARAMETER		TEST CONDITIONS			MIN	TYP†	MAX	UNIT
V_{IK}		V_{CC} = 3 V,	I_I = −18 mA				−1.2	V
I_I		V_{CC} = 3.6 V,	V_I = V_{CC} or GND				±1	µA
I_{off}		V_{CC} = 0,	V_I or V_O = 0 to 3.6 V				10	µA
I_{CC}		V_{CC} = 3.6 V,	I_O = 0,	V_I = V_{CC} or GND			10	µA
ΔI_{CC}‡	Control inputs	V_{CC} = 3.6 V,	One input at 3 V,	Other inputs at V_{CC} or GND			300	µA
C_i	Control inputs	V_I = 3 V or 0				5		pF
$C_{io(OFF)}$		V_O = 3 V or 0,	S_1, S_2, and S_3 = GND			8		pF
r_{on}§		V_{CC} = 2.3 V, TYP at V_{CC} = 2.5 V	V_I = 0	I_I = 64 mA		5	8	Ω
				I_I = 24 mA		5	8	
			V_I = 1.7 V,	I_I = 15 mA		27	40	
		V_{CC} = 3 V	V_I = 0	I_I = 64 mA		5	7	
				I_I = 24 mA		5	7	
			V_I = 2.4 V,	I_I = 15 mA		10	15	

† All typical values are at V_{CC} = 3.3 V (unless otherwise noted), T_A = 25°C.
‡ This is the increase in supply current for each input that is at the specified voltage level, rather than V_{CC} or GND.
§ Measured by the voltage drop between the A and B terminals at the indicated current through the switch. On-state resistance is determined by the lower of the voltages of the two (A or B) terminals.

switching characteristics over recommended operating free-air temperature range (unless otherwise noted) (see Figure 1)

PARAMETER	FROM (INPUT)	TO (OUTPUT)	V_{CC} = 2.5 V ± 0.2 V		V_{CC} = 3.3 V ± 0.3 V		UNIT
			MIN	MAX	MIN	MAX	
t_{pd}¶	A or B	B or A		0.15		0.25	ns
t_{pd}	S	B or A	3	11.1	3	8.8	ns
t_{en}	S	A or B	3	10.9	3	8.6	ns
t_{dis}	S	A or B	1	8.7	2	8.8	ns

¶ The propagation delay is the calculated RC time constant of the typical on-state resistance of the switch and the specified load capacitance, when driven by an ideal voltage source (zero output impedance).

Distributor of Texas Instruments: Excellent Integrated System Limited
Datasheet of SN74CBTLV16212DLR - IC LV FET BUS-EXCH SW 56-SSOP
Contact us: sales@integrated-circuit.com Website: www.integrated-circuit.com

PARAMETER MEASUREMENT INFORMATION

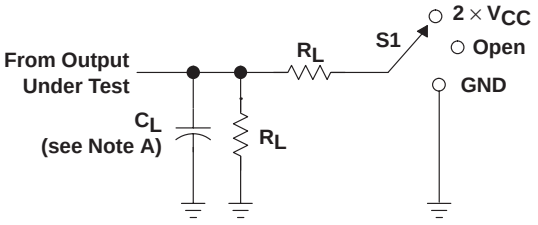

LOAD CIRCUIT

TEST	S1
t_{PLH}/t_{PHL} t_{PLZ}/t_{PZL} t_{PHZ}/t_{PZH}	Open 2 × V_{CC} GND

V_{CC}	C_L	R_L	V_Δ
2.5 V ±0.2 V	30 pF	500 Ω	0.15 V
3.3 V ±0.3 V	50 pF	500 Ω	0.3 V

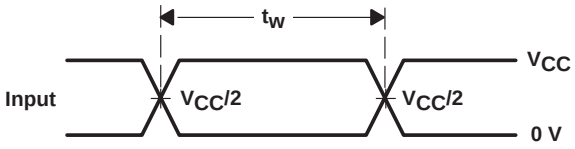

VOLTAGE WAVEFORMS
PULSE DURATION

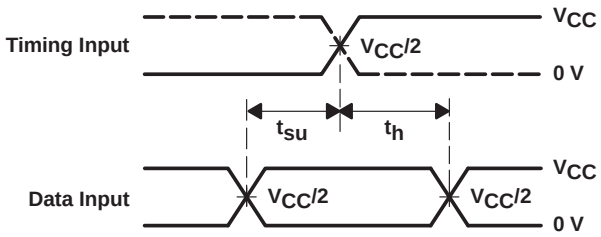

VOLTAGE WAVEFORMS
SETUP AND HOLD TIMES

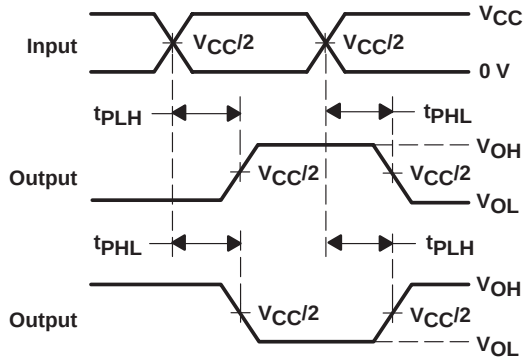

VOLTAGE WAVEFORMS
PROPAGATION DELAY TIMES
INVERTING AND NONINVERTING OUTPUTS

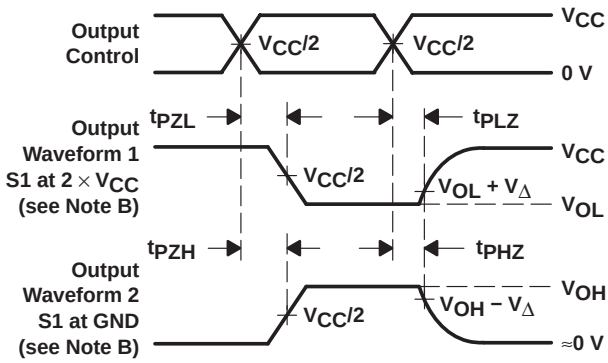

VOLTAGE WAVEFORMS
ENABLE AND DISABLE TIMES
LOW- AND HIGH-LEVEL ENABLING

NOTES:
A. C_L includes probe and jig capacitance.
B. Waveform 1 is for an output with internal conditions such that the output is low except when disabled by the output control. Waveform 2 is for an output with internal conditions such that the output is high except when disabled by the output control.
C. All input pulses are supplied by generators having the following characteristics: PRR ≤ 10 MHz, Z_O = 50 Ω, t_r ≤ 2 ns, t_f ≤ 2 ns.
D. The outputs are measured one at a time with one transition per measurement.
E. t_{PLZ} and t_{PHZ} are the same as t_{dis}.
F. t_{PZL} and t_{PZH} are the same as t_{en}.
G. t_{PLH} and t_{PHL} are the same as t_{pd}.
H. All parameters and waveforms are not applicable to all devices.

Figure 1. Load Circuit and Voltage Waveforms

TEXAS INSTRUMENTS
www.ti.com

PACKAGE OPTION ADDENDUM

27-Sep-2007

PACKAGING INFORMATION

Orderable Device	Status [1]	Package Type	Package Drawing	Pins	Package Qty	Eco Plan [2]	Lead/Ball Finish	MSL Peak Temp [3]
74CBTLV16212DLG4	ACTIVE	SSOP	DL	56	20	Green (RoHS & no Sb/Br)	CU NIPDAU	Level-1-260C-UNLIM
74CBTLV16212DLRG4	ACTIVE	SSOP	DL	56	1000	Green (RoHS & no Sb/Br)	CU NIPDAU	Level-1-260C-UNLIM
74CBTLV16212GRE4	ACTIVE	TSSOP	DGG	56	2000	Green (RoHS & no Sb/Br)	CU NIPDAU	Level-1-260C-UNLIM
74CBTLV16212GRG4	ACTIVE	TSSOP	DGG	56	2000	Green (RoHS & no Sb/Br)	CU NIPDAU	Level-1-260C-UNLIM
74CBTLV16212VRE4	ACTIVE	TVSOP	DGV	56	2000	Green (RoHS & no Sb/Br)	CU NIPDAU	Level-1-260C-UNLIM
74CBTLV16212VRG4	ACTIVE	TVSOP	DGV	56	2000	Green (RoHS & no Sb/Br)	CU NIPDAU	Level-1-260C-UNLIM
SN74CBTLV16212DL	ACTIVE	SSOP	DL	56	20	Green (RoHS & no Sb/Br)	CU NIPDAU	Level-1-260C-UNLIM
SN74CBTLV16212DLR	ACTIVE	SSOP	DL	56	1000	Green (RoHS & no Sb/Br)	CU NIPDAU	Level-1-260C-UNLIM
SN74CBTLV16212GR	ACTIVE	TSSOP	DGG	56	2000	Green (RoHS & no Sb/Br)	CU NIPDAU	Level-1-260C-UNLIM
SN74CBTLV16212VR	ACTIVE	TVSOP	DGV	56	2000	Green (RoHS & no Sb/Br)	CU NIPDAU	Level-1-260C-UNLIM

[1] The marketing status values are defined as follows:
ACTIVE: Product device recommended for new designs.
LIFEBUY: TI has announced that the device will be discontinued, and a lifetime-buy period is in effect.
NRND: Not recommended for new designs. Device is in production to support existing customers, but TI does not recommend using this part in a new design.
PREVIEW: Device has been announced but is not in production. Samples may or may not be available.
OBSOLETE: TI has discontinued the production of the device.

[2] Eco Plan - The planned eco-friendly classification: Pb-Free (RoHS), Pb-Free (RoHS Exempt), or Green (RoHS & no Sb/Br) - please check http://www.ti.com/productcontent for the latest availability information and additional product content details.
TBD: The Pb-Free/Green conversion plan has not been defined.
Pb-Free (RoHS): TI's terms "Lead-Free" or "Pb-Free" mean semiconductor products that are compatible with the current RoHS requirements for all 6 substances, including the requirement that lead not exceed 0.1% by weight in homogeneous materials. Where designed to be soldered at high temperatures, TI Pb-Free products are suitable for use in specified lead-free processes.
Pb-Free (RoHS Exempt): This component has a RoHS exemption for either 1) lead-based flip-chip solder bumps used between the die and package, or 2) lead-based die adhesive used between the die and leadframe. The component is otherwise considered Pb-Free (RoHS compatible) as defined above.
Green (RoHS & no Sb/Br): TI defines "Green" to mean Pb-Free (RoHS compatible), and free of Bromine (Br) and Antimony (Sb) based flame retardants (Br or Sb do not exceed 0.1% by weight in homogeneous material)

[3] MSL, Peak Temp. -- The Moisture Sensitivity Level rating according to the JEDEC industry standard classifications, and peak solder temperature.

Important Information and Disclaimer: The information provided on this page represents TI's knowledge and belief as of the date that it is provided. TI bases its knowledge and belief on information provided by third parties, and makes no representation or warranty as to the accuracy of such information. Efforts are underway to better integrate information from third parties. TI has taken and continues to take reasonable steps to provide representative and accurate information but may not have conducted destructive testing or chemical analysis on incoming materials and chemicals. TI and TI suppliers consider certain information to be proprietary, and thus CAS numbers and other limited information may not be available for release.

In no event shall TI's liability arising out of such information exceed the total purchase price of the TI part(s) at issue in this document sold by TI to Customer on an annual basis.

Distributor of Texas Instruments: Excellent Integrated System Limited
Datasheet of SN74CBTLV16212DLR - IC LV FET BUS-EXCH SW 56-SSOP
Contact us: sales@integrated-circuit.com Website: www.integrated-circuit.com

TAPE AND REEL INFORMATION

REEL DIMENSIONS

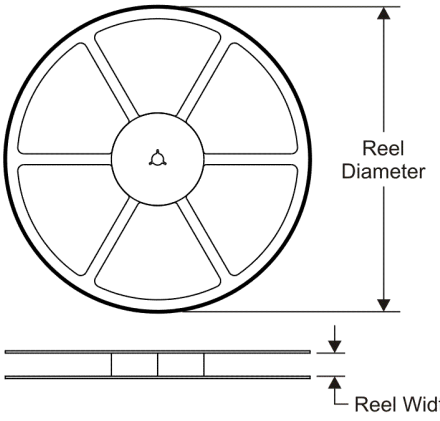

TAPE DIMENSIONS

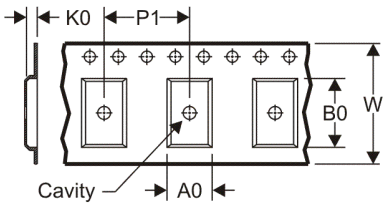

A0	Dimension designed to accommodate the component width
B0	Dimension designed to accommodate the component length
K0	Dimension designed to accommodate the component thickness
W	Overall width of the carrier tape
P1	Pitch between successive cavity centers

QUADRANT ASSIGNMENTS FOR PIN 1 ORIENTATION IN TAPE

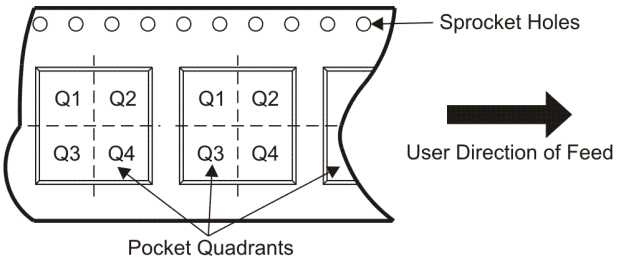

*All dimensions are nominal

Device	Package Type	Package Drawing	Pins	SPQ	Reel Diameter (mm)	Reel Width W1 (mm)	A0 (mm)	B0 (mm)	K0 (mm)	P1 (mm)	W (mm)	Pin1 Quadrant
SN74CBTLV16212DLR	SSOP	DL	56	1000	330.0	32.4	11.35	18.67	3.1	16.0	32.0	Q1
SN74CBTLV16212GR	TSSOP	DGG	56	2000	330.0	24.4	8.6	15.6	1.8	12.0	24.0	Q1
SN74CBTLV16212VR	TVSOP	DGV	56	2000	330.0	24.4	6.8	11.7	1.6	12.0	24.0	Q1

TEXAS INSTRUMENTS
www.ti.com

PACKAGE MATERIALS INFORMATION

11-Mar-2008

TAPE AND REEL BOX DIMENSIONS

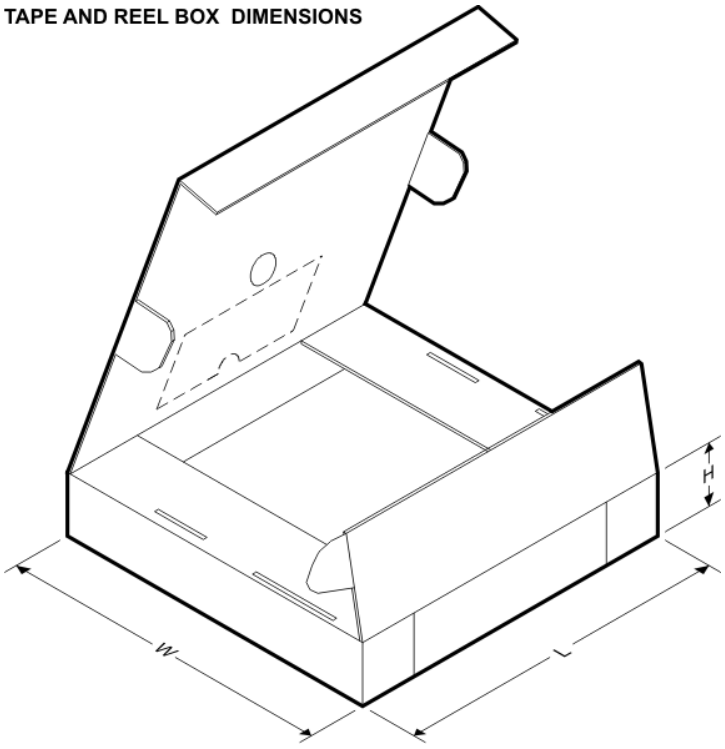

*All dimensions are nominal

Device	Package Type	Package Drawing	Pins	SPQ	Length (mm)	Width (mm)	Height (mm)
SN74CBTLV16212DLR	SSOP	DL	56	1000	346.0	346.0	49.0
SN74CBTLV16212GR	TSSOP	DGG	56	2000	346.0	346.0	41.0
SN74CBTLV16212VR	TVSOP	DGV	56	2000	346.0	346.0	41.0

Distributor of Texas Instruments: Excellent Integrated System Limited
Datasheet of SN74CBTLV16212DLR - IC LV FET BUS-EXCH SW 56-SSOP
Contact us: sales@integrated-circuit.com Website: www.integrated-circuit.com

DL (R-PDSO-G)** **PLASTIC SMALL-OUTLINE PACKAGE**

48 PINS SHOWN

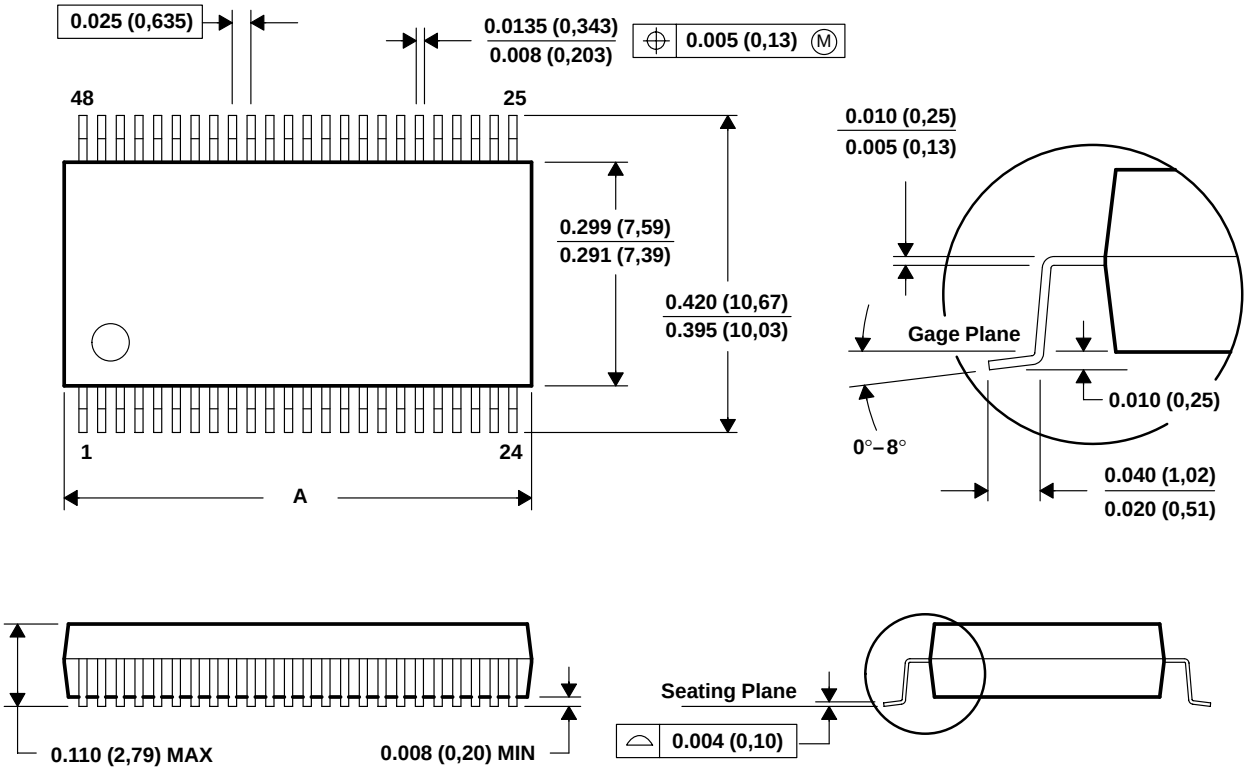

DIM \ PINS **	28	48	56
A MAX	0.380 (9,65)	0.630 (16,00)	0.730 (18,54)
A MIN	0.370 (9,40)	0.620 (15,75)	0.720 (18,29)

4040048/E 12/01

NOTES: A. All linear dimensions are in inches (millimeters).
B. This drawing is subject to change without notice.
C. Body dimensions do not include mold flash or protrusion not to exceed 0.006 (0,15).
D. Falls within JEDEC MO-118

Distributor of Texas Instruments: Excellent Integrated System Limited
Datasheet of SN74CBTLV16212DLR - IC LV FET BUS-EXCH SW 56-SSOP
Contact us: sales@integrated-circuit.com Website: www.integrated-circuit.com

DGG (R-PDSO-G)** **PLASTIC SMALL-OUTLINE PACKAGE**

48 PINS SHOWN

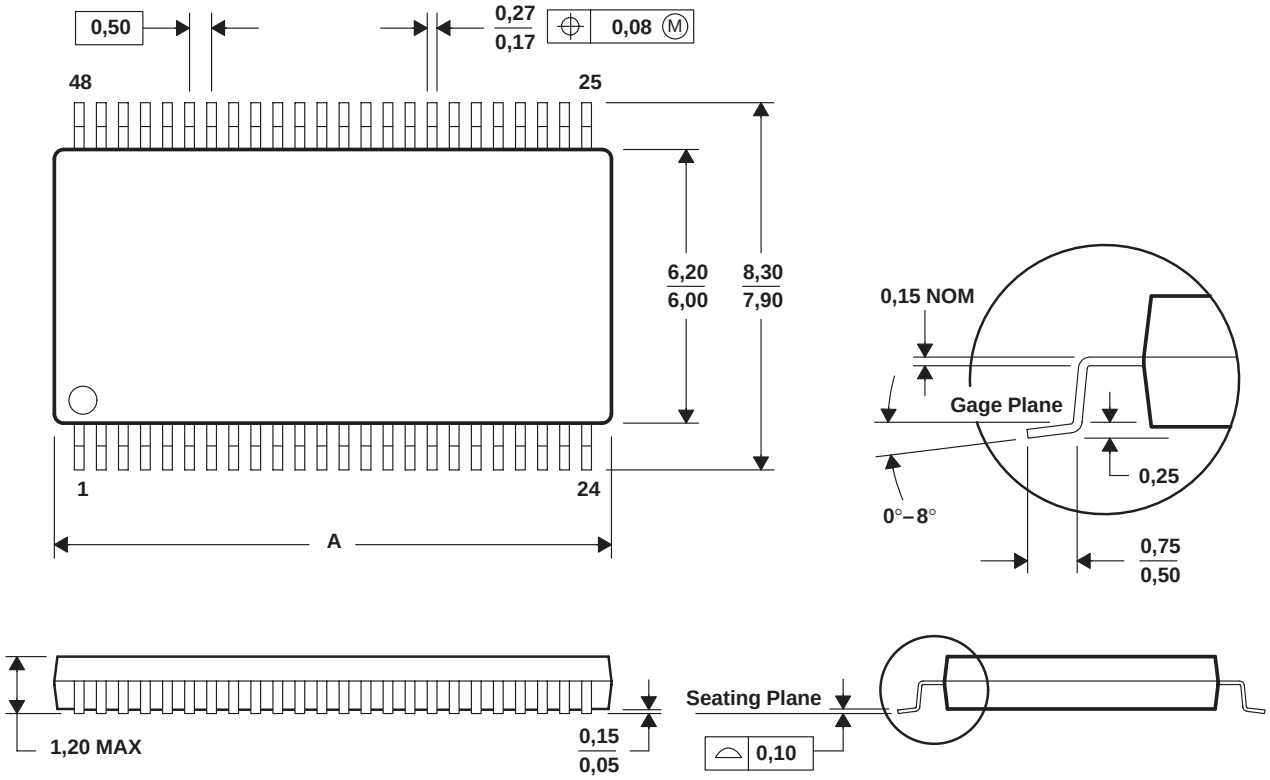

DIM \ PINS **	48	56	64
A MAX	12,60	14,10	17,10
A MIN	12,40	13,90	16,90

4040078/F 12/97

NOTES: A. All linear dimensions are in millimeters.
B. This drawing is subject to change without notice.
C. Body dimensions do not include mold protrusion not to exceed 0,15.
D. Falls within JEDEC MO-153

Distributor of Texas Instruments: Excellent Integrated System Limited
Datasheet of SN74CBTLV16212DLR - IC LV FET BUS-EXCH SW 56-SSOP
Contact us: sales@integrated-circuit.com Website: www.integrated-circuit.com

DGV (R-PDSO-G)** **PLASTIC SMALL-OUTLINE**

24 PINS SHOWN

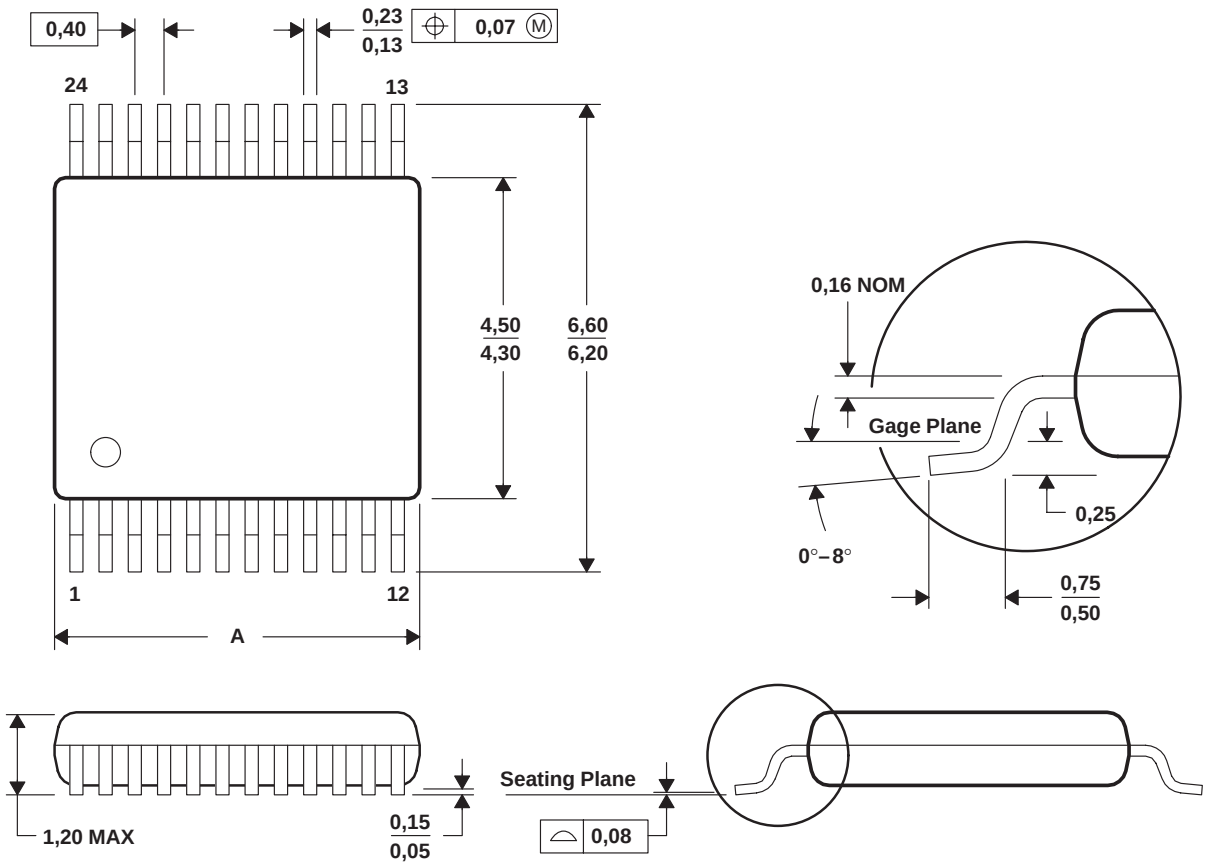

DIM \ PINS **	14	16	20	24	38	48	56
A MAX	3,70	3,70	5,10	5,10	7,90	9,80	11,40
A MIN	3,50	3,50	4,90	4,90	7,70	9,60	11,20

4073251/E 08/00

NOTES: A. All linear dimensions are in millimeters.
B. This drawing is subject to change without notice.
C. Body dimensions do not include mold flash or protrusion, not to exceed 0,15 per side.
D. Falls within JEDEC: 24/48 Pins – MO-153
14/16/20/56 Pins – MO-194

IMPORTANT NOTICE

Texas Instruments Incorporated and its subsidiaries (TI) reserve the right to make corrections, modifications, enhancements, improvements, and other changes to its products and services at any time and to discontinue any product or service without notice. Customers should obtain the latest relevant information before placing orders and should verify that such information is current and complete. All products are sold subject to TI's terms and conditions of sale supplied at the time of order acknowledgment.

TI warrants performance of its hardware products to the specifications applicable at the time of sale in accordance with TI's standard warranty. Testing and other quality control techniques are used to the extent TI deems necessary to support this warranty. Except where mandated by government requirements, testing of all parameters of each product is not necessarily performed.

TI assumes no liability for applications assistance or customer product design. Customers are responsible for their products and applications using TI components. To minimize the risks associated with customer products and applications, customers should provide adequate design and operating safeguards.

TI does not warrant or represent that any license, either express or implied, is granted under any TI patent right, copyright, mask work right, or other TI intellectual property right relating to any combination, machine, or process in which TI products or services are used. Information published by TI regarding third-party products or services does not constitute a license from TI to use such products or services or a warranty or endorsement thereof. Use of such information may require a license from a third party under the patents or other intellectual property of the third party, or a license from TI under the patents or other intellectual property of TI.

Reproduction of TI information in TI data books or data sheets is permissible only if reproduction is without alteration and is accompanied by all associated warranties, conditions, limitations, and notices. Reproduction of this information with alteration is an unfair and deceptive business practice. TI is not responsible or liable for such altered documentation. Information of third parties may be subject to additional restrictions.

Resale of TI products or services with statements different from or beyond the parameters stated by TI for that product or service voids all express and any implied warranties for the associated TI product or service and is an unfair and deceptive business practice. TI is not responsible or liable for any such statements.

TI products are not authorized for use in safety-critical applications (such as life support) where a failure of the TI product would reasonably be expected to cause severe personal injury or death, unless officers of the parties have executed an agreement specifically governing such use. Buyers represent that they have all necessary expertise in the safety and regulatory ramifications of their applications, and acknowledge and agree that they are solely responsible for all legal, regulatory and safety-related requirements concerning their products and any use of TI products in such safety-critical applications, notwithstanding any applications-related information or support that may be provided by TI. Further, Buyers must fully indemnify TI and its representatives against any damages arising out of the use of TI products in such safety-critical applications.

TI products are neither designed nor intended for use in military/aerospace applications or environments unless the TI products are specifically designated by TI as military-grade or "enhanced plastic." Only products designated by TI as military-grade meet military specifications. Buyers acknowledge and agree that any such use of TI products which TI has not designated as military-grade is solely at the Buyer's risk, and that they are solely responsible for compliance with all legal and regulatory requirements in connection with such use.

TI products are neither designed nor intended for use in automotive applications or environments unless the specific TI products are designated by TI as compliant with ISO/TS 16949 requirements. Buyers acknowledge and agree that, if they use any non-designated products in automotive applications, TI will not be responsible for any failure to meet such requirements.

Following are URLs where you can obtain information on other Texas Instruments products and application solutions:

Products		**Applications**	
Amplifiers	amplifier.ti.com	Audio	www.ti.com/audio
Data Converters	dataconverter.ti.com	Automotive	www.ti.com/automotive
DSP	dsp.ti.com	Broadband	www.ti.com/broadband
Clocks and Timers	www.ti.com/clocks	Digital Control	www.ti.com/digitalcontrol
Interface	interface.ti.com	Medical	www.ti.com/medical
Logic	logic.ti.com	Military	www.ti.com/military
Power Mgmt	power.ti.com	Optical Networking	www.ti.com/opticalnetwork
Microcontrollers	microcontroller.ti.com	Security	www.ti.com/security
RFID	www.ti-rfid.com	Telephony	www.ti.com/telephony
RF/IF and ZigBee® Solutions	www.ti.com/lprf	Video & Imaging	www.ti.com/video
		Wireless	www.ti.com/wireless

Mailing Address: Texas Instruments, Post Office Box 655303, Dallas, Texas 75265
Copyright © 2008, Texas Instruments Incorporated