Excellent Integrated System Limited

Stocking Distributor

Click to view price, real time Inventory, Delivery & Lifecycle Information:

Hammond Manufacturing
1441-12BK3CWW

For any questions, you can email us directly:
sales@integrated-circuit.com

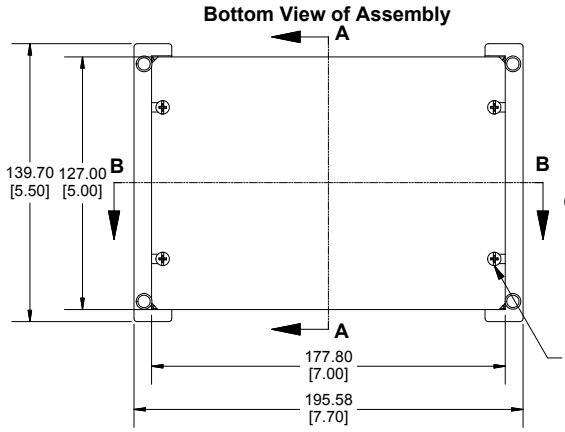

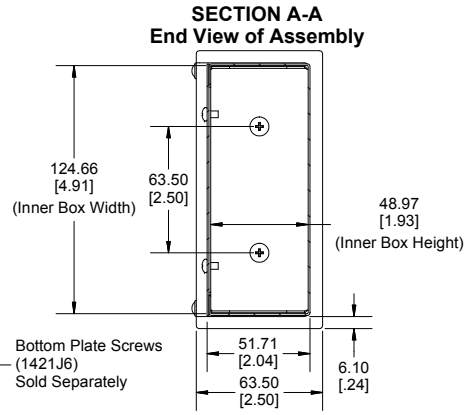

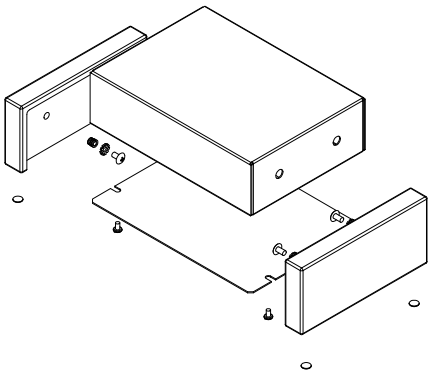

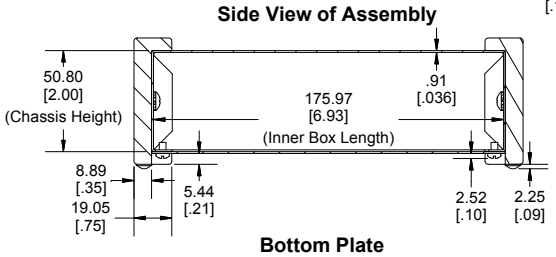

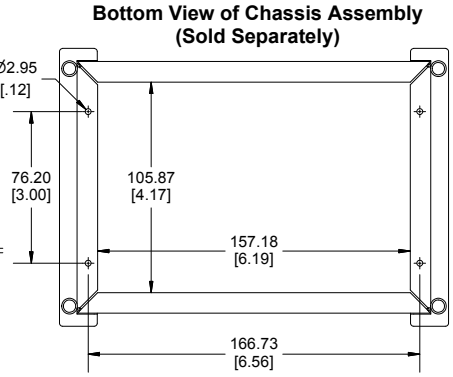

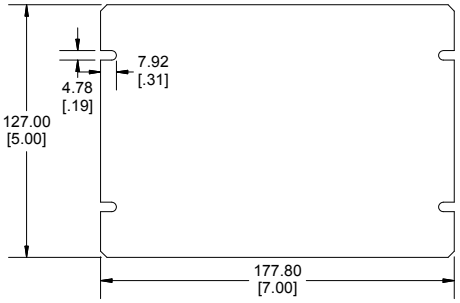

Dimensions:
mm
[inches]

Enclosures can be Factory Modified (Milling, Drilling, Printing etc.)
Contact Factory mjm@hammondmfg.com for quotes
Solid models of this enclosure available in STEP or IGES.

NOTE
Chassis Includes Wooden Sides, Adhesive Rubber Feet and Required Hardware Chassis is Made of 0.036" Steel. Bottom Plate is Made of 0.036" Steel. (Sold Separately)
Screws should not be torqued past 4.43 lbf.in (50 cN.m)

PART NUMBERS	
1441-12BK3CWW Enclosure	
Satin Black Chassis	1441-12BK3CWW
ACCESSORIES	
Satin Black Bottom Plate	1431-12BK3
Black Cover Screws (Pkg 6) [6-32 x 1/4" Self-Tapping Screws]	1421J6BK
Clear Self-Adhesive Rubber Feet (Pkg 24)	1421T6CL

HAMMOND MANUFACTURING™
1441-12CWW
www.hammondmfg.com