Excellent Integrated System Limited

Stocking Distributor

Click to view price, real time Inventory, Delivery & Lifecycle Information:

Vishay Semiconductor/Diodes Division
5KASMC12AHM3/57

For any questions, you can email us directly:
sales@integrated-circuit.com

Distributor of Vishay Semiconductor/Diodes Division: Excellent Integrated System Limite
Datasheet of 5KASMC12AHM3/57 - TVS DIODE 12VWM 19.9VC DO214AB
Contact us: sales@integrated-circuit.com Website: www.integrated-circuit.com

5KASMC10A thru 5KASMC43A

Vishay General Semiconductor

Surface Mount PAR® Transient Voltage Suppressors

High Temperature Stability and High

DO-214AB (SMCJ)

PRIMARY CHARACTERISTICS	
V_{WM}	10 V to 43 V
V_{BR}	11.1 V to 52.8
P_{PPM} (10 x 1000 µs)	5000 W
P_D	6.5 W
T_J max.	185 °C
Polarity	Uni-directional
Package	DO-214AB (SMCJ)

TYPICAL APPLICATIONS

Use in sensitive electronics protection against voltage transients induced by inductive load switching and lighting on ICs, MOSFET, signal lines of sensor units for consumer, computer, industrial, automotive, and telecommunication.

FEATURES

- Junction passivation optimized design passivated anisotropic rectifier technology
- T_J = 185 °C capability suitable for high reliability and automotive requirement
- Available in uni-directional polarity only
- 5000 W peak pulse power capability with a 10/1000 µs waveform
- Excellent clamping capability
- Very fast response time
- Low incremental surge resistance
- Meets MSL level 1, per J-STD-020, LF maximum peak of 260 °C
- AEC-Q101 qualified
- Material categorization: For definitions of compliance please see www.vishay.com/doc?99912

RoHS COMPLIANT
HALOGEN FREE

MECHANICAL DATA

Case: DO-214AB (SMCJ)
Molding compound meets UL 94 V-0 flammability rating Base P/NHM3 - halogen-free, RoHS-compliant, and AEC-Q101 qualified

Terminals: Matte tin plated leads, solderable per J-STD-002 and JESD 22-B102
HM3 suffix meets JESD 201 class 2 whisker test

Polarity: Color band denotes cathode end

MAXIMUM RATINGS (T_A = 25 °C unless otherwise noted)

PARAMETER	SYMBOL	VALUE	UNIT
Peak pulse power dissipation with a 10/1000 µs waveform (fig. 3)	P_{PPM} (1)	5000	W
Peak power pulse current with a 10/1000 µs waveform (fig. 1)	I_{PPM} (1)	See next table	A
Power dissipation on infinite heatsink, T_M = 50 °C	P_D	6.5	W
Operating junction and storage temperature range	T_J, T_{STG}	- 65 to + 185	°C

Note

(1) Non-repetitive current pulse, per fig. 3 and derated above T_A = 25 °C per fig. 2

For technical questions within your region: DiodesAmericas@vishay.com, DiodesAsia@vishay.com, DiodesEurope@vishay.com
THIS DOCUMENT IS SUBJECT TO CHANGE WITHOUT NOTICE. THE PRODUCTS DESCRIBED HEREIN AND THIS DOCUMENT ARE SUBJECT TO SPECIFIC DISCLAIMERS, SET FORTH AT www.vishay.com/doc?91000

ELECTRICAL CHARACTERISTICS (T_A = 25 °C unless otherwise noted)

DEVICE TYPE	DEVICE MARKING CODE	BREAKDOWN VOLTAGE V_{BR} AT I_T (1) (V)		TEST CURRENT I_T (mA)	STAND-OFF VOLTAGE V_{WM} (V)	MAXIMUM REVERSE LEAKAGE AT V_{WM} I_R (µA)	MAXIMUM REVERSE LEAKAGE AT V_{WM} T_J = 150 °C I_D (µA)	MAXIMUM PEAK PULSE SURGE CURRENT I_{PPM} (2) (A)	MAXIMUM CLAMPING VOLTAGE AT I_{PPM} V_C (V)
		MIN.	MAX.						
5KASMC10A	5AX	11.1	12.3	1.0	10	20.0	500	294.1	17.0
5KASMC12A	5BE	13.3	14.7	1.0	12	10.0	300	251.3	19.9
5KASMC13A	5BG	14.4	15.9	1.0	13	10.0	300	232.6	21.5
5KASMC16A	5BP	17.8	19.7	1.0	16	2.0	50	192.3	26.0
5KASMC17A	5BR	18.9	20.9	1.0	17	2.0	50	181.2	27.6
5KASMC18A	5BT	20.0	22.1	1.0	18	2.0	50	171.2	29.2
5KASMC20A	5BV	22.2	24.5	1.0	20	2.0	50	154.3	32.4
5KASMC22A	5BX	24.4	26.9	1.0	22	2.0	50	140.8	35.5
5KASMC24A	5BZ	26.7	29.5	1.0	24	2.0	50	128.5	38.9
5KASMC26A	5CE	28.9	31.9	1.0	26	2.0	50	118.8	42.1
5KASMC28A	5CG	31.1	34.4	1.0	28	2.0	50	110.1	45.4
5KASMC30A	5CK	33.3	36.8	1.0	30	2.0	50	103.3	48.4
5KASMC33A	5CM	36.7	40.6	1.0	33	2.0	50	93.8	53.3
5KASMC36A	5CP	40.0	44.2	1.0	36	2.0	50	86.1	58.1
5KASMC40A	5CR	44.4	49.1	1.0	40	2.0	50	77.5	64.5
5KASMC43A	5CT	47.8	52.8	1.0	43	2.0	50	72.0	69.4

Notes

(1) Pulse test: $t_p \leq 50$ ms
(2) Surge current waveform per fig. 3 and derated per fig. 2
(3) All terms and symbols are consistent with ANSI/IEEE C62.35

THERMAL CHARACTERISTICS (T_A = 25 °C unless otherwise noted)

PARAMETER	SYMBOL	VALUE	UNIT
Typical thermal resistance, junction to ambient	$R_{\theta JA}$ (1)	100	°C/W
Typical thermal resistance, junction to mount	$R_{\theta JM}$ (2)	20.8	°C/W

Notes

(1) Mounted on minimum recommended pad layout
(2) Mounted on infinite heat sink

ORDERING INFORMATION (Example)

PREFERRED P/N	UNIT WEIGHT (g)	PREFERRED PACKAGE CODE	BASE QUANTITY	DELIVERY MODE
5KASMC10AHM3/57 (1)	0.257	57	850	7" diameter plastic tape and reel
5KASMC10AHM3/9A (1)	0.257	9A	3500	13" diameter plastic tape and reel

Note

(1) AEC-Q101 qualified

For technical questions within your region: DiodesAmericas@vishay.com, DiodesAsia@vishay.com, DiodesEurope@vishay.com
THIS DOCUMENT IS SUBJECT TO CHANGE WITHOUT NOTICE. THE PRODUCTS DESCRIBED HEREIN AND THIS DOCUMENT ARE SUBJECT TO SPECIFIC DISCLAIMERS, SET FORTH AT www.vishay.com/doc?91000

RATINGS AND CHARACTERISTICS CURVES

(T_A = 25 °C unless otherwise noted)

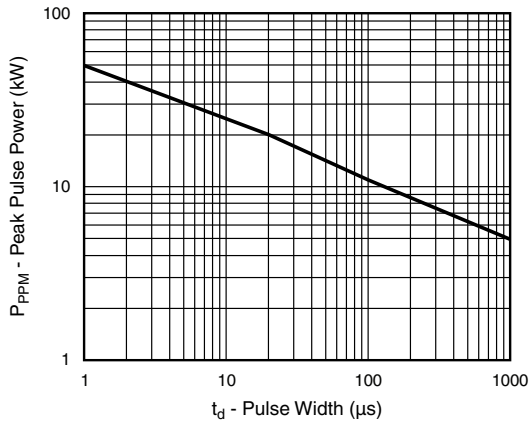

Fig. 1 - Peak Pulse Power Rating Curve

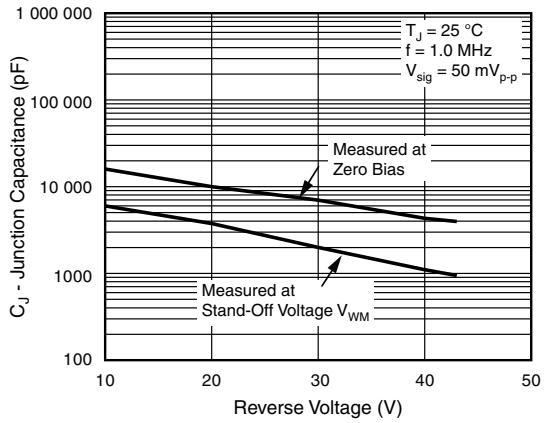

Fig. 4 - Typical Junction Capacitance

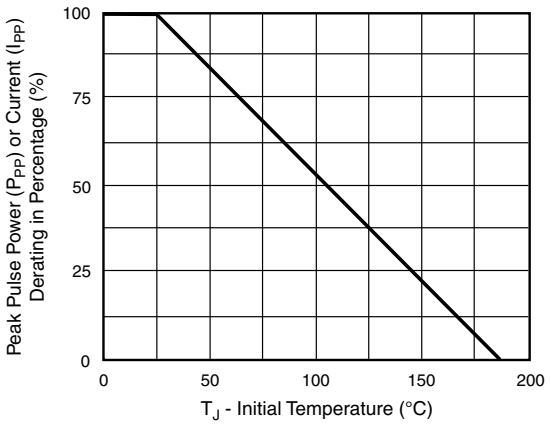

Fig. 2 - Pulse Power or Current vs. Initial Junction Temperature

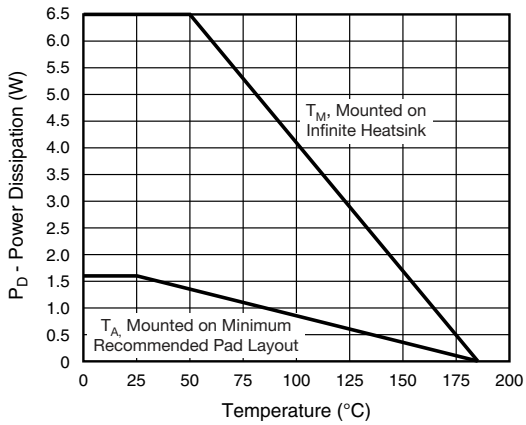

Fig. 5 - Power Derating Curve

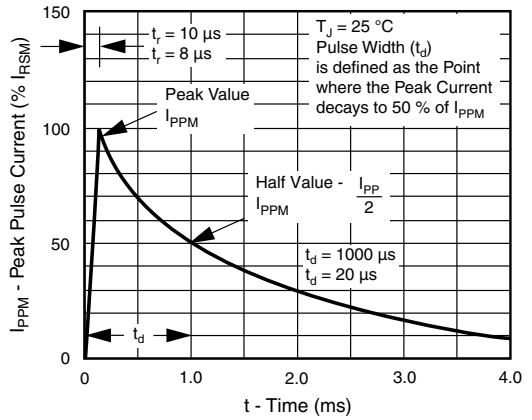

Fig. 3 - Pulse Waveform

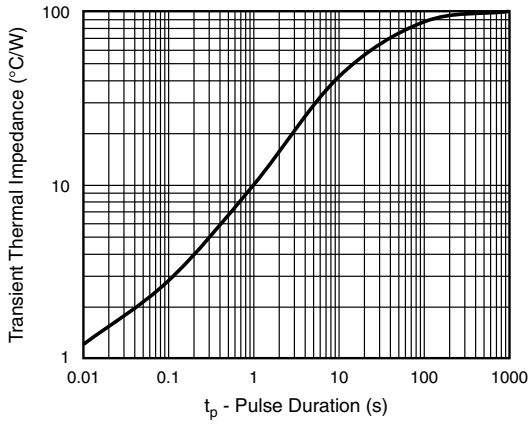

Fig. 6 - Typical Transient Thermal Impedance

For technical questions within your region: DiodesAmericas@vishay.com, DiodesAsia@vishay.com, DiodesEurope@vishay.com
THIS DOCUMENT IS SUBJECT TO CHANGE WITHOUT NOTICE. THE PRODUCTS DESCRIBED HEREIN AND THIS DOCUMENT ARE SUBJECT TO SPECIFIC DISCLAIMERS, SET FORTH AT www.vishay.com/doc?91000

PACKAGE OUTLINE DIMENSIONS in inches (millimeters)

DO-214AB (SMCJ)

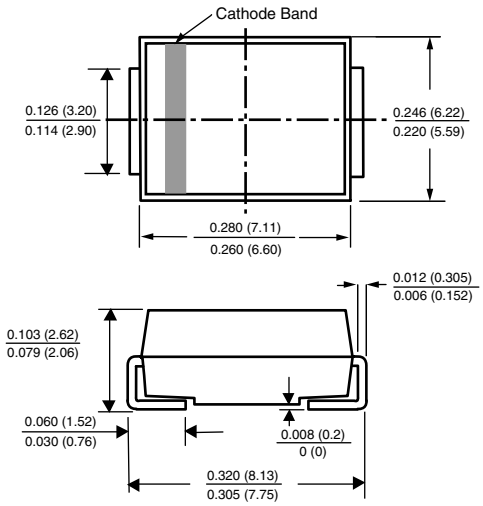

Mounting Pad Layout

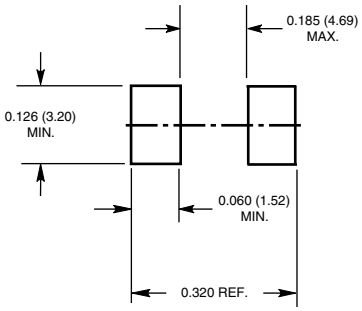

For technical questions within your region: DiodesAmericas@vishay.com, DiodesAsia@vishay.com, DiodesEurope@vishay.com
THIS DOCUMENT IS SUBJECT TO CHANGE WITHOUT NOTICE. THE PRODUCTS DESCRIBED HEREIN AND THIS DOCUMENT ARE SUBJECT TO SPECIFIC DISCLAIMERS, SET FORTH AT www.vishay.com/doc?91000

Distributor of Vishay Semiconductor/Diodes Division: Excellent Integrated System Limite
Datasheet of 5KASMC12AHM3/57 - TVS DIODE 12VWM 19.9VC DO214AB
Contact us: sales@integrated-circuit.com Website: www.integrated-circuit.com

Disclaimer

ALL PRODUCT, PRODUCT SPECIFICATIONS AND DATA ARE SUBJECT TO CHANGE WITHOUT NOTICE TO IMPROVE RELIABILITY, FUNCTION OR DESIGN OR OTHERWISE.

Vishay Intertechnology, Inc., its affiliates, agents, and employees, and all persons acting on its or their behalf (collectively, “Vishay”), disclaim any and all liability for any errors, inaccuracies or incompleteness contained in any datasheet or in any other disclosure relating to any product.

Vishay makes no warranty, representation or guarantee regarding the suitability of the products for any particular purpose or the continuing production of any product. To the maximum extent permitted by applicable law, Vishay disclaims (i) any and all liability arising out of the application or use of any product, (ii) any and all liability, including without limitation special, consequential or incidental damages, and (iii) any and all implied warranties, including warranties of fitness for particular purpose, non-infringement and merchantability.

Statements regarding the suitability of products for certain types of applications are based on Vishay’s knowledge of typical requirements that are often placed on Vishay products in generic applications. Such statements are not binding statements about the suitability of products for a particular application. It is the customer’s responsibility to validate that a particular product with the properties described in the product specification is suitable for use in a particular application. Parameters provided in datasheets and / or specifications may vary in different applications and performance may vary over time. All operating parameters, including typical parameters, must be validated for each customer application by the customer’s technical experts. Product specifications do not expand or otherwise modify Vishay’s terms and conditions of purchase, including but not limited to the warranty expressed therein.

Except as expressly indicated in writing, Vishay products are not designed for use in medical, life-saving, or life-sustaining applications or for any other application in which the failure of the Vishay product could result in personal injury or death. Customers using or selling Vishay products not expressly indicated for use in such applications do so at their own risk. Please contact authorized Vishay personnel to obtain written terms and conditions regarding products designed for such applications.

No license, express or implied, by estoppel or otherwise, to any intellectual property rights is granted by this document or by any conduct of Vishay. Product names and markings noted herein may be trademarks of their respective owners.