Excellent Integrated System Limited

Stocking Distributor

Click to view price, real time Inventory, Delivery & Lifecycle Information:

Crouzet Switches
IMC22124C

For any questions, you can email us directly:
sales@integrated-circuit.com

Inductive Proximity Sensors

M12 Inductive Proximity Sensors

Standard Length
"Mini's"
Extended Sensing
3 Wire DC
2 Wire DC
2 Wire AC

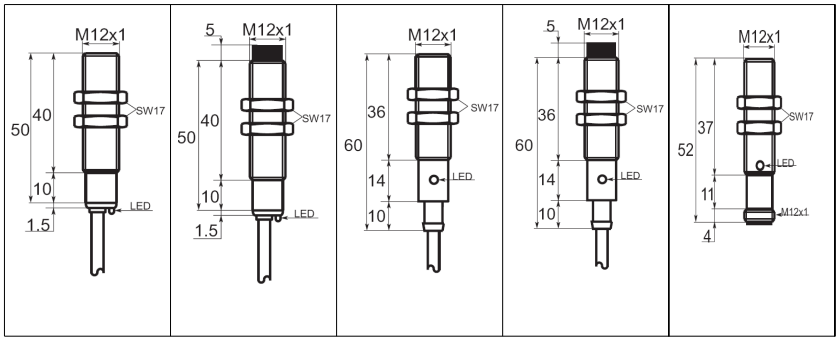

(Wiring Schematic)

3 Wire DC	PNP – Normally Open	(1)	IMM32122C	IMM35124C	IMN32122C	IMN35124C	IMN32122M12
	PNP – Normally Closed	(1)	IMM33122C	IMM36124C	IMN33122C	IMN36124C	IMN33122M12
	PNP – Selectable	(4)	IMM34122C	IMM37124C	IMN34122C	IMN37124C	IMN34122M12
	NPN – Normally Open	(2)	IMM22122C	IMM25124C	IMN22122C	IMN25124C	IMN22122M12
	NPN – Normally Closed	(2)	IMM23122C	IMM26124C	IMN23122C	IMN26124C	IMN23122M12
	NPN – Selectable	(5)	IMM24122C	IMM27124C	IMN24122C	IMN27124C	IMN24122M12
2 Wire DC	Normally Open		-	-	-	-	-
	Normally Closed		-	-	-	-	-
2 Wire AC	Normally Open		-	-	-	-	-
	Normally Closed		-	-	-	-	-

Mating cables / connectors					
Form	M12 Shielded	M12 Non-Shielded	M12 Shielded	M12 Non-Shielded	M12 Shielded
Nominal Sensing Distance (Sn)	2mm	4mm	2mm	4mm	2mm
Housing Material	Nickel Plated Brass				
Termination Type	2.0 Meter Cable	2.0 Meter Cable	2.0 Meter Cable	2.0 Meter Cable	M12 Connector
Min / Max Supply Voltage	10 to 30Vdc				
Max. Load Current (Ir)	200mA				
Max ripple factor (Vr)	≤ 10%				
Voltage Drop (Ud)	≤ 3V @ 200mA				
Power Consumption (Io)	≤ 10mA				
Switching Frequency (Hz)	1.5kHz	1kHz	1.5kHz	1kHz	1.5kHz
Repeatability	< 2% nominal sensing distance				
Hysteresis	≤ 10% Sn				
Short Circuit Protection	Yes				
Output LED	Yes				
Operating Temperature	-25 to +70 C				
IP Rating	IP67 (with connector mounted)				

Wiring Diagram

① PNP ④ PNP ② NPN ⑤ NPN

Inductive Proximity Sensors

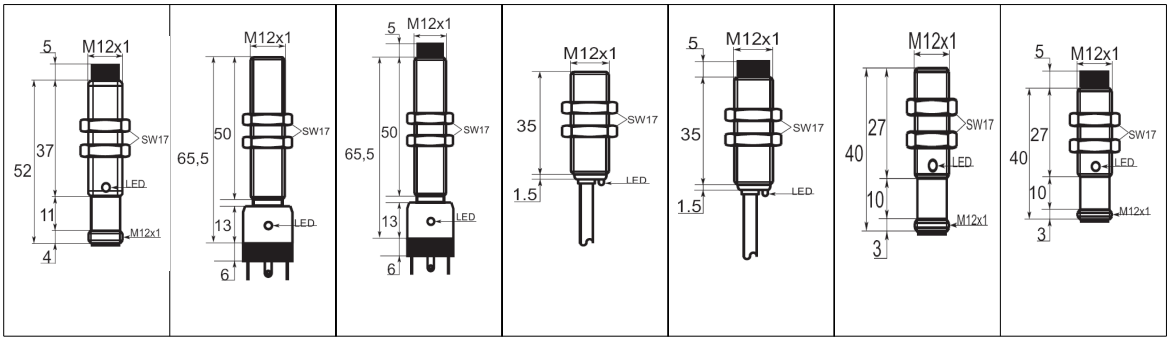

PNP – NO	IMN35124M12	IMN32122P	IMN35124P	IMC32122C	IMC35124C	IMC32122M12	IMC35124M12
PNP – NC	IMN36124M12	IMN33122P	IMN36124P	IMC33122C	IMC36124C	IMC33122M12	IMC36124M12
PNP – NO/NC	IMN37124M12	IMN34122P	IMN37124P	IMC34122C	IMC36124C	IMC34122M12	IMC37124M12
NPN – NO	IMN25124M12	IMN22122P	IMN25124P	IMC22122C	IMC25124C	IMC22122M12	IMC25124M12
NPN – NC	IMN26124M12	IMN23122P	IMN26124P	IMC23122C	IMC26124C	IMC23122M12	IMC26124M12
NPN – NO/NC	IMN27124M12	IMN24122P	IMN27124P	IMC24122C	IMC26124C	IMC24122M12	IMC27124M12
2W DC NO	-	-	-	-	-	-	-
2W DC NC	-	-	-	-	-	-	-
2W AC NO	-	-	-	-	-	-	-
2W AC NC	-	-	-	-	-	-	-
Mates							
Form	M12 Non-Shielded	M12 Shielded	M12 Non-Shielded	M12 Shielded	M12 Non-Shielded	M12 Shielded	M12 Non-Shielded
Sn	4mm	2mm	4mm	2mm	4mm	2mm	4mm
Housing	Nickel Plated Brass						
Termination	M12 Connector	Sub-Base Plug	Sub-Base Plug	2.0 Meter Cable	2.0 Meter Cable	M12 Connector	M12 Connector
Supply Vdc	10 to 30Vdc						
Max Load	200mA						
Max ripple	≤ 10%						
Ud	≤ 3V @ 200mA						
Io	≤ 10mA						
Hz	1kHz	1.5kHz	1kHz	1.5kHz	1kHz	1.5kHz	1kHz
Repeatability	< 2% nominal sensing distance						
Hysteresis	≤ 10% Sn						
Short Protection	Yes						
LED	Yes						
Op Temp	-25 to +70 C						
IP Rating	IP67 (with connector mounted)						

1 + MARRONE / BROWN
4 OUT NERO / BLACK
3 - BLU / BLUE

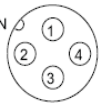

1 + MARRONE / BROWN
2 NC OUT BIANCO/WHITE
3 - BLU / BLUE
4 NO OUT NERO / BLACK

1 + MARRONE / BROWN
4 OUT NERO / BLACK
3 - BLU / BLUE

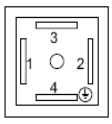

1 + MARRONE / BROWN
2 NC OUT BIANCO/WHITE
3 - BLU / BLUE
4 NO OUT NERO / BLACK

Inductive Proximity Sensors

M12 Inductive Proximity Sensors

Standard Length
"Mini's"
Extended Sensing
3 Wire DC
2 Wire DC
2 Wire AC

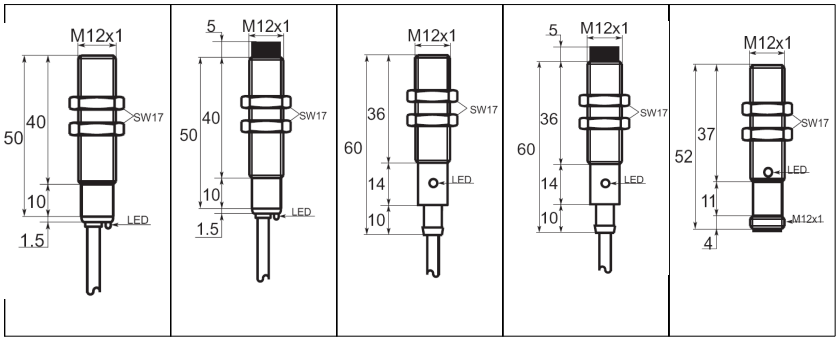

(Wiring Schematic)

3 Wire DC	PNP – Normally Open	(1)	IMM32124C	IMM35128C	IMN32124C	IMN35128C	IMN32124M12
	PNP – Normally Closed	(1)	IMM33124C	IMM36128C	IMN33124C	IMN36128C	IMN33124M12
	PNP – Selectable	(4)	-	-	-	-	-
	NPN – Normally Open	(2)	IMM22124C	IMM25128C	IMN22124C	IMN25128C	IMN22124M12
	NPN – Normally Closed	(2)	IMM23124C	IMM26128C	IMN23124C	IMN26128C	IMN23124M12
	NPN – Selectable	(5)	-	-	-	-	-
2 Wire DC	Normally Open		-	-	-	-	-
	Normally Closed		-	-	-	-	-
2 Wire AC	Normally Open		-	-	-	-	-
	Normally Closed		-	-	-	-	-
	Mating cables / connectors						
	Form		M12 Shielded	M12 Non-Shielded	M12 Shielded	M12 Non-Shielded	M12 Shielded
	Nominal Sensing Distance (Sn)		4mm	8mm	4mm	8mm	4mm
	Housing Material		Nickel Plated Brass				
	Termination Type		2.0 Meter Cable	2.0 Meter Cable	2.0 Meter Cable	2.0 Meter Cable	M12 Connector
	Min / Max Supply Voltage		10 to 30Vdc				
	Max. Load Current (Ir)		200mA				
	Max ripple factor (Vr)		≤ 10%				
	Voltage Drop (Ud)		≤ 3V @ 200mA				
	Power Consumption (Io)		≤ 10mA				
	Switching Frequency (Hz)		1kHz	1kHz	1kHz	1kHz	1kHz
	Repeatability		< 2% nominal sensing distance				
	Hysteresis		≤ 10% Sn				
	Short Circuit Protection		Yes				
	Output LED		Yes				
	Operating Temperature		-25 to +70 C				
	IP Rating		IP67 (with connector mounted)				

Wiring Diagram

① PNP ④ PNP ② NPN ⑤ NPN

Inductive Proximity Sensors

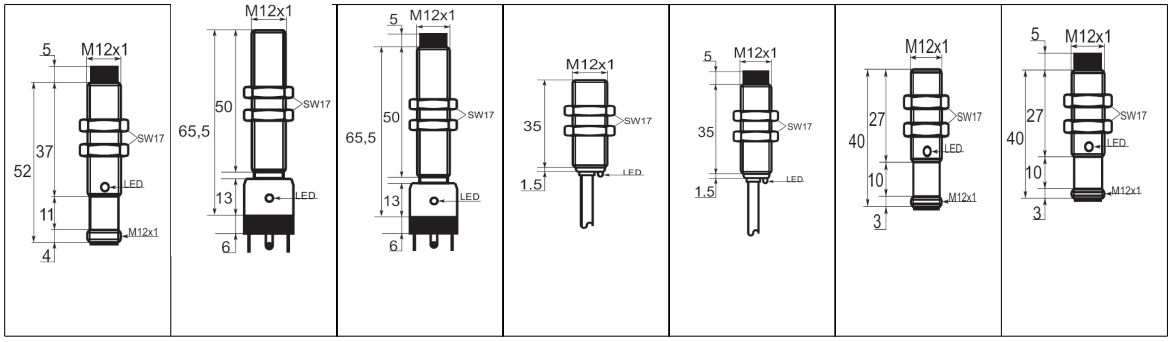

PNP – NO	IMN35128M12	IMN32124P	IMN35128P	IMC32124C	IMC35128C	IMC32124M12	IMC35128M12
PNP – NC	IMN36128M12	IMN33124P	IMN36128P	IMC33124C	IMC36128C	IMC33124M12	IMC36128M12
PNP – NO/NC	-	-	-	-	-	-	-
NPN – NO	IMN25128M12	IMN22124P	IMN25128P	IMC22124C	IMC25128C	IMC22124M12	IMC25128M12
NPN – NC	IMN26128M12	IMN23124P	IMN26128P	IMC23124C	IMC26128C	IMC23124M12	IMC26128M12
NPN – NO/NC	-	-	-	-	-	-	-
2W DC NO	-	-	-	-	-	-	-
2W DC NC	-	-	-	-	-	-	-
2W AC NO	-	-	-	-	-	-	-
2W AC NC	-	-	-	-	-	-	-
Mates							
Form	M12 Non-Shielded	M12 Shielded	M12 Non-Shielded	M12 Shielded	M12 Non-Shielded	M12 Shielded	M12 Non-Shielded
Sn	8mm	4mm	8mm	4mm	8mm	4mm	8mm
Housing	Nickel Plated Brass						
Termination	M12 Connector	Sub-Base Plug	Sub-Base Plug	2.0 Meter Cable	2.0 Meter Cable	M12 Connector	M12 Connector
Supply Vdc	10 to 30Vdc						
Max Load	200mA						
Max ripple	≤ 10%						
Ud	≤ 3V @ 200mA						
Io	≤ 10mA						
Hz	1kHz	1kHz	1kHz	1kHz	1kHz	1kHz	1kHz
Repeatability	< 2% nominal sensing distance						
Hysteresis	≤ 10% Sn						
Short Protection	Yes						
LED	Yes						
Op Temp	-25 to +70 C						
IP Rating	IP67 (with connector mounted)						

1 + MARRONE / BROWN
4 OUT NERO / BLACK
3 - BLU / BLUE

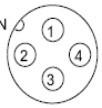

1 + MARRONE / BROWN
2 NC OUT BIANCO/WHITE
3 - BLU / BLUE
4 NO OUT NERO / BLACK

1 + MARRONE / BROWN
4 OUT NERO / BLACK
3 - BLU / BLUE

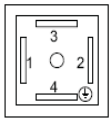

1 + MARRONE / BROWN
2 NC OUT BIANCO/WHITE
3 - BLU / BLUE
4 NO OUT NERO / BLACK

For Technical Assistance and / or Customer Service, call 800/677-5311, www.crouzet-usa.com

Inductive Proximity Sensors

M12 Inductive Proximity Sensors

Standard Length
"Mini's"
Extended Sensing
3 Wire DC
2 Wire DC
2 Wire AC

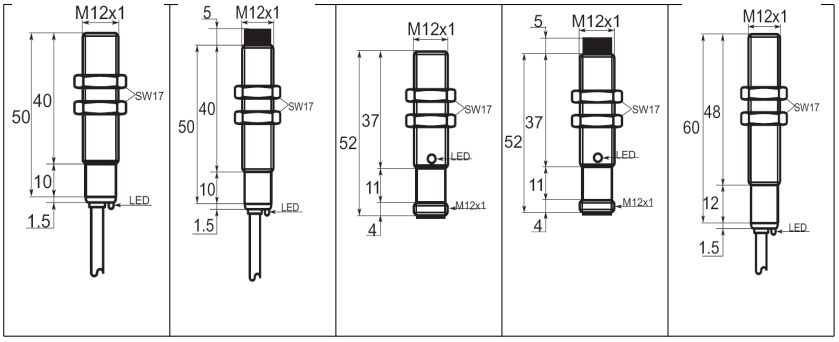

		(Wiring Schematic)					
3 Wire DC	PNP – Normally Open	(1)	-	-	-	-	-
	PNP – Normally Closed	(1)	-	-	-	-	-
	PNP – Selectable	(4)	-	-	-	-	-
	NPN – Normally Open	(2)	-	-	-	-	-
	NPN – Normally Closed	(2)	-	-	-	-	-
	NPN – Selectable	(5)	-	-	-	-	-
2 Wire DC	Normally Open	(6)	IMM42122C	IMM45124C	IMN42122M12	IMN45124M12	-
	Normally Closed	(6)	IMM43122C	IMM46124C	IMN43122M12	IMN46124M12	-
2 Wire AC	Normally Open	(7)	-	-	-	-	IMM62122C
	Normally Closed	(7)	-	-	-	-	IMM63122C

Mating cables / connectors					
Form	M12 Shielded	M12 Non-Shielded	M12 Shielded	M12 Non-Shielded	M12 Shielded
Nominal Sensing Distance (Sn)	2mm	4mm	2mm	4mm	2mm
Housing Material	Nickel Plated Brass				
Termination Type	2.0 Meter Cable	2.0 Meter Cable	M12 Connector	M12 Connector	2.0 Meter Cable
Min / Max Supply Voltage	10 to 30Vdc				20 to 220 Vac
Max. Load Current (Ir)	100mA				400 mA
Max ripple factor (Vr)	≤ 10%				-
Voltage Drop (Ud)	≤ 7 Vdc				≤ 4.5Vac
Power Consumption (Io)	≤ 0.7mA				≤ 2.5mA
Switching Frequency (Hz)	1kHz	800 Hz	1kHz	800 Hz	20 Hz
Repeatability	< 2% nominal sensing distance				
Hysteresis	≤ 10% Sn				
Short Circuit Protection	Yes				No
Output LED	Yes				Yes
Operating Temperature	-25 to +70 C				
IP Rating	IP67 (with connector mounted)				

Wiring Diagram

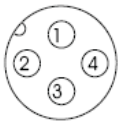

4 + NERO / BLACK
3 - BLU / BLUE

Inductive Proximity Sensors

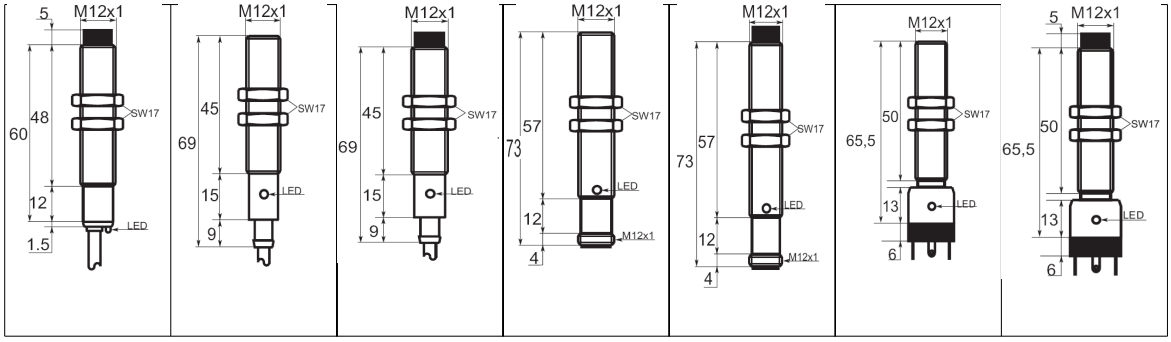

PNP – NO	-	-	-	-	-	-	-
PNP – NC	-	-	-	-	-	-	-
PNP – NO/NC	-	-	-	-	-	-	-
NPN – NO	-	-	-	-	-	-	-
NPN – NC		-	-	-	-	-	
NPN – NO/NC	-	-	-	-	-	-	-
2W DC NO	-	-	-	-	-	-	-
2W DC NC	-	-	-	-	-	-	-
2W AC NO	IMM65124C	IMN62122C	IMN65124C	IMN62122M12	IMN65124M12	IMN62122P	IMN65124P
2W AC NC	IMM66124C	IMN63122C	IMN66124C	IMN63122M12	IMN66124M12	IMN63122P	IMN66124P
Mates							
Form	M12 Non-Shielded	M12 Shielded	M12 Non-Shielded	M12 Shielded	M12 Non-Shielded	M12 Shielded	M12 Non-Shielded
Sn	4mm	2mm	4mm	2mm	4mm	2mm	4mm
Housing	Nickel Plated Brass						
Termination	2.0 Meter Cable	2.0 Meter Cable	2.0 Meter Cable	M12 Connector	M12 Connector	Sub-Base Plug	Sub-Base Plug
Supply Vdc	20 to 220Vac						
Max Load	400mA						
Max ripple	-						
Ud	≤ 4.5Vac						
Io	≤ 2.5mA						
Hz	20 Hz	20 Hz	20 Hz	20 Hz	20 Hz	20 Hz	20 Hz
Repeatability	< 2% nominal sensing distance						
Hysteresis	≤ 10% Sn						
Short Protection	No						
LED	Yes						
Op Temp	-25 to +70 C						
IP Rating	IP67 (with connector mounted)						

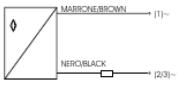

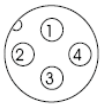

1 ~ MARRONE / BROWN
2/3 ~ BLU / BLUE

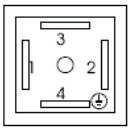

1 ~ MARRONE / BROWN
2/3 ~ BLU / BLUE