Excellent Integrated System Limited

Stocking Distributor

Click to view price, real time Inventory, Delivery & Lifecycle Information:

Essentra Components (formerly Richco, Inc.)
BHDL-4-01

For any questions, you can email us directly:
sales@integrated-circuit.com

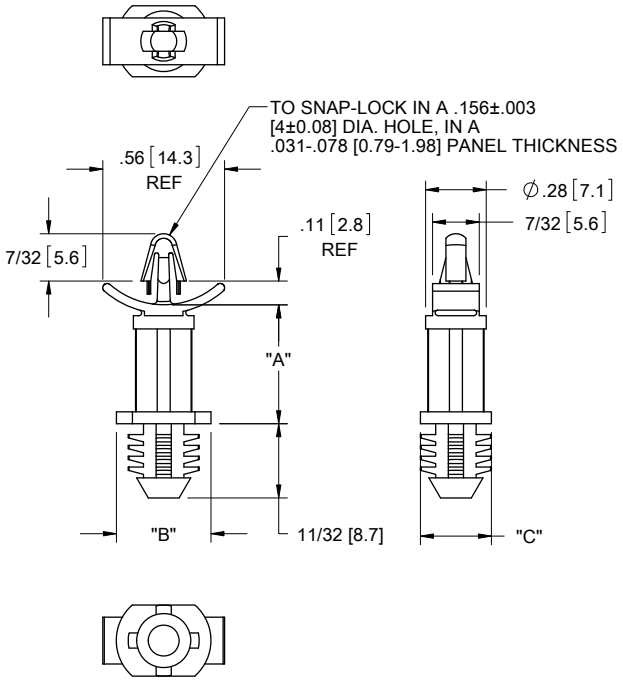

MATERIAL: NYLON 6/6 UL 94 V-2 (RMS-01) COLOR: NATURAL PART NO.	"A"±.015 [0.4]	"B"±.015	"C"±.015	HOLE DIA. ±.003 [0.08]	PANEL THICKNESS
BHDL-4-01	1/4 [6.4]	7/16 [11.1]	5/16 [7.9]	.312 [7.92]	1/4 [6.4] MIN
BHDL-6-01	3/8 [9.5]				
BHDL-8-01	1/2 [12.7]				
BHDL-10-01	5/8 15.9]				
BHDL-12-01	3/4 [19.1]				
BHDL-14-01	7/8 [22.2]				
*BHDL1-4-01	1/4 [6.4]	3/8 [9.5]	17/64 [6.7]	.250 [6.35]	1/4 [6.4] MIN
*BHDL1-6-01	3/8 [9.5]				
*BHDL1-8-01	1/2 [12.7]				
*BHDL1-10-01	5/8 15.9]				
*BHDL1-12-01	3/4 [19.1]				
*BHDL1-14-01	7/8 [22.2]				

*PARTS AVAILABLE BY SPECIAL ORDER ONLY

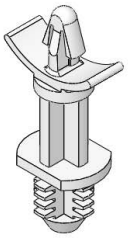

NOTES:
1. MATERIAL:NYLON 6/6 UL 94 V-0 (RMS-19), COLOR: NATURAL. AVAILABLE BY SPECIAL ORDER ONLY.
2. ALTERNATE UNITS FOR REFERENCE ONLY

REV.	DESCRIPTION	ENGR.	DATE
F	SEE CO 200035 FOR CHANGES	SK	09/26/07
E	SEE ECN #1262 FOR CHANGES	SK	12/11/06
D	REDRAWN, SEE ECN #1208 FOR CHANGES	SK	11/29/06
-	SEE ENGINEERING FOR REVISIONS A-C	---	------

TITLE: BLIND HOLE DUAL LOCKING CIRCUIT BOARD SUPPORT

DWG IN IN [MM]

FINAL

CREATED USING SOLIDWORKS

TOLERANCES UNLESS NOTED
.XX=±.010
.XXX=±.005
FRAC.=±1/64
ANG.=±1°

FILE #: BHDL
SHEET: 1 OF 1
SHEET SIZE: A
RE: RICHCO, INC.

DWN: SK
APP: RT
DT: 11/28/06
CHKD: SJ

RICHCO, INC.
ENG@RICHCO-INC.COM
(773) 539-4060

PART # SEE TABLE

PRINT TYPE CA