Excellent Integrated System Limited

Stocking Distributor

Click to view price, real time Inventory, Delivery & Lifecycle Information:

Bel Fuse Inc.
5-6605721-1

For any questions, you can email us directly:
sales@integrated-circuit.com

Distributor of Bel Fuse Inc.: Excellent Integrated System Limited
Datasheet of 5-6605721-1 - CONN MAGJACK 1PORT 100 BASE-T
Contact us: sales@integrated-circuit.com Website: www.integrated-circuit.com

© COPYRIGHT BY TRP CONNECTOR ALL RIGHTS RESERVED

REVISIONS				
#	LTR	DESCRIPTION	DATE	DRN	APVD
	D	LOGO CHANGE	23APR2013	JC	KZ

MECHANICAL:

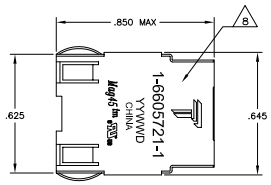

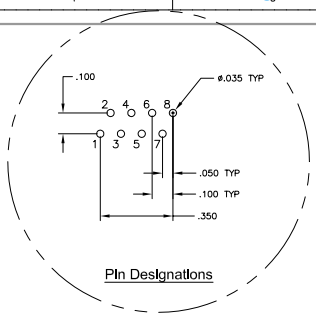

Pin Designations

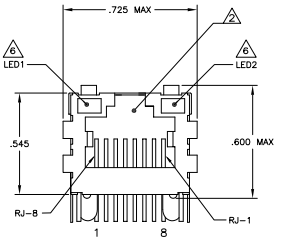

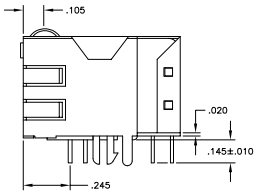

715 SERIES MAGNETIC CIRCUIT 3 7

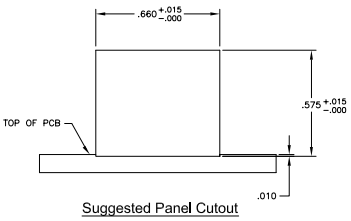

Suggested Panel Cutout

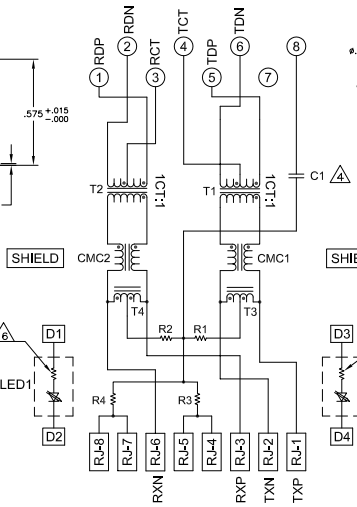

C1 = 1000 pF, 2kV DECOUPLING CAPACITOR
R1-R4 = 75 OHMS, 1/16W, 5% RESISTORS

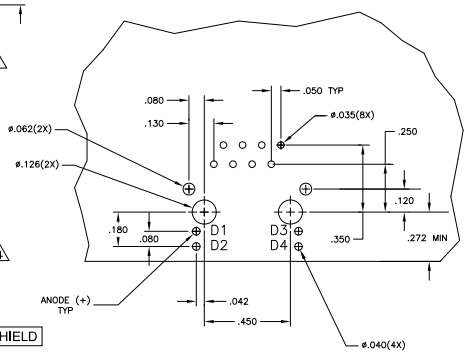

Suggested PCB Layout
(Component Side)

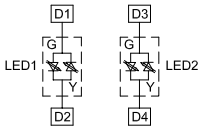

LED Configuration
FOR 6605721-6 ONLY

1. MATERIALS:
HOUSING - THERMOPLASTIC PET POLYESTER FLAMMABILITY RATING UL 94V-0.
SHIELD - .010" THICK, C26800 BRASS PREPLATED WITH 30µINCH MIN SEMI-BRIGHT NICKEL. SOLDER TABS POST DIPPED WITH 100µINCH MIN SAC SOLDER.
MOD JACK CONTACTS - 0.0157 X 0.018" PHOSPHOR BRONZE, 50µINCH MIN OVERALL NICKEL UNDERPLATE WITH SELECT 50µINCH MIN HARD GOLD FINISH PLATE.
SOLDERTAILS WITH 100µINCH MIN MATTE TIN AND/OR SAC SOLDER DIP.
LIGHT EMITTING DIODE(LED) - DIFFUSED EPOXY LENS, .020" X .020" CARBON STEEL WIREFRAME LEADS PRE-PLATED WITH 80µINCH SILVER OVER 40µINCH NICKEL UNDERPLATE OVER 40µINCH COPPER UNDERPLATE. POST-PLATED WITH 100µINCH MIN MATTE TIN AND/OR SAC SOLDER DIP OR PURE TIN SOLDER DIP.

2. RJ45 JACK CAVITY CONFORMS TO FCC RULES AND REGULATIONS PART 68, SUB PART F.

3. MAGNETICS
-IMPEDANCE: 100 OHMS
-TURNS RATIO (CHIP-CABLE): TX = 1:1, RX = 1:1
-OPEN CIRCUIT INDUCTANCE (OCL): 350µH MIN @100kHz, 0.1VRMS, 8mADC BIAS FROM 0°C TO 70°C, TX AND RX
-PERFORMANCE @ 25°C.
INSERTION LOSS (IL): 1.1dB MAX FROM 0.5MHz TO 100MHz
RETURN LOSS (RL): 18dB MIN FROM 0.5MHZ TO 30MHz
18-20LOG(f/30)dB MIN FROM 30.1MHz TO 60MHz
12dB MIN FROM 60.1MHz TO 80MHz
CROSSTALK ATTENUATION: 35dB MIN FROM 0.5MHz TO 40MHz
33-20*LOG(f/50)dB MIN FROM 40.1MHz TO 100MHz
COMMON MODE REJECTION RATIO (CMRR): 30dB MIN FROM 0.5MHz TO 100MHz
-ISOLATION VOLTAGE:2250VDC (MAX) FOR 60 SECONDS WITH A RISE TIME OF 500V/SEC.

4. C1 IS AN OPTIONAL. IF NO CAPACITOR, TRACE IS CONTINUOS.

5. OPERATING TEMPERATURE: FROM 0° - +70°C

6. THE 250 OHM LED RESISTORS ARE OPTIONAL, PLEASE SEE CHART FOR PRESENCE OR ABSENCE OF LED RESISTORS. IF THE LED WITHOUT 250 OHM RESISTORS, LED IS DRIVEN WITH CONSTANT CURRENT AT APPROX 20mA.
LED COLOR: DOMINANT WAVELENGTH (λD): GREEN 568 nm TYP. @ IF=20mA
FORWARD VOLTAGE (VF): GREEN 2.2V TYP. @ IF=20mA
DOMINANT WAVELENGTH (λD): YELLOW 588 nm TYP. @ IF=20mA
FORWARD VOLTAGE (VF): YELLOW 2.1V TYP. @ IF=20mA.
DOMINANT WAVELENGTH (λD): ORANGE 605 nm TYP. @ IF=20mA
FORWARD VOLTAGE (VF): ORANGE 2.05V TYP. @ IF=20mA.
IF THE LED WITH 250 OHM RESISTORS,LED IS DRIVEN WITH 5V VOLTAGE AND THE MAX OPERATING CURRENT IS 20mA.
LED COLOR : DOMINANT WAVELENGTH (λD): GREEN 568 nm TYP. @ VF=5V
FORWARD CURRENT (IF): GREEN 12 mA TYP. @ VF=5V
DOMINANT WAVELENGTH (λD): YELLOW 588 nm TYP. @ VF=5V
FORWARD CURRENT (IF): YELLOW 13 mA TYP. @ VF=5V

7. INDICATED CONNECTIONS ARE FOR NIC CONFIGURATION. THE MAGNETICS ARE SYMMETRICAL, AND SUPPORTS AUTO-MDI/MDIX.

8. TRP CONNECTOR LOGO, PART NUMBER, DATE CODE, COUNTRY OF ORIGIN AND AGENCY APPROVAL MARKING IN APPROXIMATE LOCATION SHOWN.

9. THESE PARTS ARE RECOMMENDED FOR WAVE SOLDERING PROCESS, PEAK WAVE SOLDERING TEMPERATURE IS 265°C, 10SECONDS MAX.

10. OBSOLETE PARTS: OBSOLETE CIS STREAMLINING PER D.RENAUD/D.SINISI

	LED RESISTOR 6	4 DECOUPLING CAPACITOR	6 LED1	6 LED2	PART NUMBER
OBSOLETE	NO	YES	GREEN	YELLOW	~~5-6605721-8~~
	YES	YES	YELLOW	GREEN	5-6605721-2
	YES	YES	GREEN	YELLOW	5-6605721-1
10 OBSOLETE	NO	NO	GREEN/YELLOW	GREEN/YELLOW	~~6605721-6~~

THIS DRAWING IS A CONTROLLED DOCUMENT.
DIMENSIONS: INCHES
TOLERANCE UNLESS OTHERWISE SPECIFIED: 0 PLC ± -; 1 PLC ± .; 2 PLC ± .00; 3 PLC ± .005; ANGLES ± -
MATERIAL 1
FINISH 1

DR	G. ATTADIA - DOCKS	1MAR05
DS	D. FAROLE	11MAR05
PM	D. FAROLE	11MAR05
PRODUCT SPEC	108-2100	
APPLICATION SPEC	–	
WEIGHT	–	

TRP
TRP connector
Dongguan China

NAME: 1X1 MAG45(TM) MODULAR JACK, 7N2 SCHEMATIC 715 SERIES MAGNETIC CIRCUIT, SHIELDED, OPTIONAL DECOUPLING CAPACITOR, WITH LEDS
SIZE: A1 | DATE CODE | DRAWING NO: ©-6605721 | REPRINTED TO: –
CUSTOMER DRAWING | SCALE: NTS | SHEET 1 OF 1 | REV D