Excellent Integrated System Limited

Stocking Distributor

Click to view price, real time Inventory, Delivery & Lifecycle Information:

Littelfuse
59600000005

For any questions, you can email us directly:
sales@integrated-circuit.com

Miniature Fuseholders

Holder / No. 596

Not for new designs;
please refer to holder no. 830

PC Mount, for 5x20mm Fuses

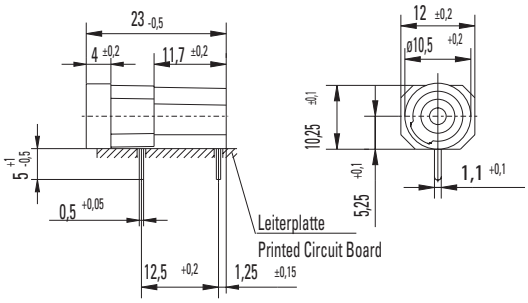

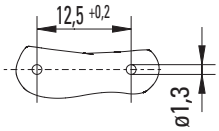

Holes in the Printed Circuit Board

Cap / No. 583

Flush Mount Type

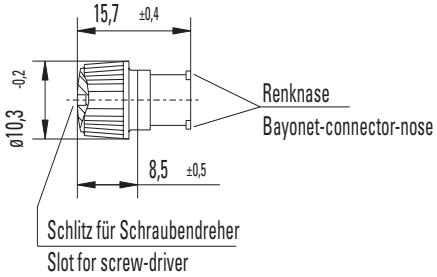

Specifications

Montage
(2) Solder pins0.5 x 1.1mm

Protection Class & Category
IP 40 (IEC 60529)

Materials

Holder:	Duroplastic (Phenolplast PF), black
Cap:	Thermoplastic (Polyamide PA 6.6), UL 94 V-0, black
Metal Parts:	Copper alloy, corrosion protected
Terminals:	solderable tinned

Electrical Data (23 °C)

Rated Voltage:	250 V
max. Current/Power:	6.3 A / 2.0 W

Operating Temperature
-25 °C to 70 °C (consider de-rating)

Stock Conditions
10 °C to 60 °C

Contact Resistance
≤ 5 mΩ

Dielectric Strength
3 kV, 50Hz, 1 min., dry

Insulation Resistance
> 10 MΩ (500 V DC, 1 min.)

Solderability
235 °C, 3 sec. (Wave)
350 °C, 1 sec. (Soldering Iron)

Soldering Heat Resistance
260 °C, 5 sec.

Minimum Cross Section
Conduction Path - 0.2mm^2

Marking
596, 250 V

Unit weight
2,2 g (596) / 1,7 g (583)

Order Information

Packaging
Bulk (100 St.)

Order Numbers

Holder	No. 596 0000 000
Cap	No. 583 0000 000

Note: 1.00 means the number one with two decimal places. 1,000 means the number one thousand.

WICKMANN

In our continuing strategy to deliver unparalleled circuit protection solutions, technical expertise and application leadership, we proudly introduce the WICKMANN Group and its products to the Littelfuse portfolio.

WebSite www.littelfuse.com