FAIRCHILD SEMICONDUCTOR®

September 2009

MCT2M, MCT2EM, MCT210M, MCT271M Phototransistor Optocouplers

Features

- UL recognized (File # E90700, Vol. 2)
- IEC60747-5-2 recognized (File # 102497)
  – Add option V (e.g., MCT2VM)

Applications

- Power supply regulators
- Digital logic inputs
- Microprocessor inputs

Description

The MCT2XXM series optoisolators consist of a gallium arsenide infrared emitting diode driving a silicon phototransistor in a 6-pin dual in-line package.

Schematic

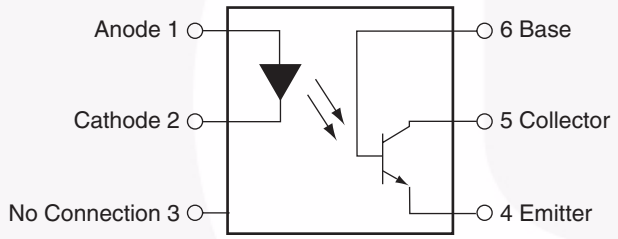

Package Outlines

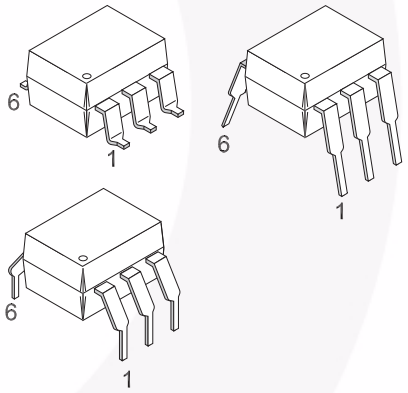

©2005 Fairchild Semiconductor Corporation

Absolute Maximum Ratings

Stresses exceeding the absolute maximum ratings may damage the device. The device may not function or be operable above the recommended operating conditions and stressing the parts to these levels is not recommended. In addition, extended exposure to stresses above the recommended operating conditions may affect device reliability. The absolute maximum ratings are stress ratings only.

Symbol	Parameter	Value	Units
TOTAL DEVICE			
T_{STG}	Storage Temperature	-40 to +150	°C
T_{OPR}	Operating Temperature	-40 to +100	°C
T_{SOL}	Lead Solder Temperature	260 for 10 sec	°C
P_D	Total Device Power Dissipation @ T_A = 25°C	250	mW
	Derate above 25°C	2.94	mW/°C
EMITTER			
I_F	DC/Average Forward Input Current	60	mA
V_R	Reverse Input Voltage	3	V
I_F(pk)	Forward Current – Peak (300µs, 2% Duty Cycle)	3	A
P_D	LED Power Dissipation @ T_A = 25°C	120	mW
	Derate above 25°C	1.41	mW/°C
DETECTOR			
I_C	Collector Current	50	mA
V_{CEO}	Collector-Emitter Voltage	30	V
P_D	Detector Power Dissipation @ T_A = 25°C	150	mW
	Derate above 25°C	1.76	mW/°C

Electrical Characteristics (T_A = 25°C unless otherwise specified)

Individual Component Characteristics

Symbol	Parameter	Test Conditions	Device	Min.	Typ.*	Max.	Units
EMITTER							
V_F	Input Forward Voltage	I_F = 20mA	MCT2M MCT2EM MCT271M		1.25	1.50	V
		T_A = 0°C–70°C, I_F = 40mA	MCT210M		1.33		
I_R	Reverse Leakage Current	V_R = 3.0V	MCT2M MCT2EM MCT271M		0.001	10	µA
		T_A = 0°C–70°C, V_R = 6.0V	MCT210M				
DETECTOR							
BV_{CEO}	Collector-Emitter Breakdown Voltage	I_C = 1.0mA, I_F = 0	ALL	30	100		V
		T_A = 0°C–70°C	MCT210M				
BV_{CBO}	Collector-Base Breakdown Voltage	I_C = 10µA, I_F = 0	MCT2M MCT2EM MCT271M	70	120		V
		T_A = 0°C–70°C	MCT210M	30			
BV_{ECO}	Emitter-Collector Breakdown Voltage	I_E = 100µA, I_F = 0	MCT2M MCT2EM MCT271M	7	10		V
		T_A = 0°C–70°C	MCT210M	6	10		
I_{CEO}	Collector-Emitter Dark Current	V_{CE} = 10V, I_F = 0	ALL		1	50	nA
		V_{CE} = 5V, T_A = 0°C–70°C				30	µA
I_{CBO}	Collector-Base Dark Current	V_{CB} = 10V, I_F = 0	ALL			20	nA
C_{CE}	Capacitance	V_{CE} = 0V, f = 1MHz	ALL		8		pF

*All typical T_A = 25°C

Isolation Characteristics

Symbol	Parameter	Test Conditions	Min	Typ*	Max	Units
V_{ISO}	Input-Output Isolation Voltage	f = 60Hz, t = 1 sec.	7500			Vac(pk)
R_{ISO}	Isolation Resistance	V_{I-O} = 500 VDC	10^{11}			Ω
C_{ISO}	Isolation Capacitance			0.2	2	pF

*All typicals at T_A = 25°C

Electrical Characteristics (Continued) (T_A = 25°C unless otherwise specified)

Transfer Characteristics

Symbol	Parameter	Test Conditions	Device	Min.	Typ.*	Max.	Unit
DC CHARACTERISTICS							
CTR	Output Collector Current	T_A = 0°C–70°C	MCT210M	150			%
		I_F = 10mA, V_{CE} = 10V	MCT2M MCT2EM	20			
			MCT271M	45		90	
		I_F = 3.2mA to 32mA, V_{CE} = 0.4V, T_A = 0°C–70°C	MCT210M	50			
$V_{CE(SAT)}$	Collector-Emitter Saturation Voltage	I_C = 2mA, I_F = 16mA	MCT2M MCT2EM MCT271M			0.4	V
		I_C = 16mA, I_F = 32mA, T_A = 0°C–70°C	MCT210M				
AC CHARACTERISTICS							
t_{on}	AC Characteristic Saturated Turn-on Time from 5V to 0.8V	I_F = 15mA, V_{CC} = 5V, R_L = 2kΩ, R_B = Open (Fig. 11)	MCT2M MCT2EM		1.1		µs
		I_F = 20mA, V_{CC} = 5 V, R_L = 2kΩ, R_B = 100kΩ) (Fig. 11)	MCT2M MCT2EM		1.3		
t_{off}	Saturated Turn-off Time from SAT to 2.0 V	I_F = 15mA, V_{CC} = 5V, R_L = 2kΩ, R_B = Open (Fig. 11)	MCT2M MCT2EM		50		µs
		I_F = 20mA, V_{CC} = 5V, R_L = 2kΩ, R_B = 100kΩ (Fig. 11)	MCT2M MCT2EM		20		
t_{on}	Turn-on Time	I_F = 10mA, V_{CC} = 10V, R_L = 100Ω	MCT2M MCT2EM		2		µs
t_{off}	Turn-off Time	I_F = 10mA, V_{CC} = 10V, R_L = 100Ω	MCT2M MCT2EM		2		µs
t_r	Rise Time	I_F = 10mA, V_{CC} = 10V, R_L = 100Ω	MCT2M MCT2EM		2		µs
t_f	Fall Time	I_F = 10mA, V_{CC} = 10V, R_L = 100Ω	MCT2M MCT2EM		1.5		µs
t_{on}	Saturated turn-on time	I_F = 16mA, R_L = 1.9kΩ, V_{CC} = 5V (Fig. 11)	MCT271M		1.0		µs
t_{off}	Saturated turn-off time (Approximates a typical TTL interface)				48		µs
t_{on}	Saturated turn-on time	I_F = 16mA, R_L = 4.7kΩ, V_{CC} = 5 V (Fig. 20)	MCT271M		1.0		µs
t_{off}	Saturated turn-off time (Approximates a typical low power TTL interface)				98		µs
t_r	Saturated rise time	I_F = 16mA, R_L = 560Ω, V_{CC} = 5V) (Fig. 11, 12)	MCT210M		1.0		µs
t_f	Saturated fall time				11		µs
$T_{PD\ (HL)}$	Saturated propagation delay – HIGH to LOW	I_F = 16mA, R_L = 2.7kΩ (Fig. 11, 12)	MCT210M		1.0		µs
$T_{PD\ (LH)}$	Saturated propagation delay – LOW to HIGH				50		µs
t_r	Non-saturated rise time	I_C = 2mA, V_{CC} = 5V, R_L = 100Ω (Fig. 11)	MCT210M		2		µs
t_f	Non-saturated fall time				2		µs
t_{on}	Non-saturated turn-on time	I_C = 2mA, V_{CC} = 5V, R_L = 100Ω (Fig. 20)	MCT271M		2	7	µs
t_{off}	Non-saturated turn-off time				2	7	µs

*All typicals at T_A = 25°C

Safety and Insulation Ratings

As per IEC 60747-5-2, this optocoupler is suitable for “safe electrical insulation” only within the safety limit data. Compliance with the safety ratings shall be ensured by means of protective circuits.

Symbol	Parameter	Min.	Typ.	Max.	Unit
	Installation Classifications per DIN VDE 0110/1.89 Table 1				
	For Rated Main Voltage < 150Vrms		I-IV		
	For Rated Main voltage < 300Vrms		I-IV		
	Climatic Classification		55/100/21		
	Pollution Degree (DIN VDE 0110/1.89)		2		
CTI	Comparative Tracking Index	175			
V_{PR}	Input to Output Test Voltage, Method b, V_{IORM} x 1.875 = V_{PR}, 100% Production Test with tm = 1 sec, Partial Discharge < 5pC	1594			V_{peak}
	Input to Output Test Voltage, Method a, V_{IORM} x 1.5 = V_{PR}, Type and Sample Test with tm = 60 sec, Partial Discharge < 5pC	1275			V_{peak}
V_{IORM}	Max. Working Insulation Voltage	850			V_{peak}
V_{IOTM}	Highest Allowable Over Voltage	6000			V_{peak}
	External Creepage	7			mm
	External Clearance	7			mm
	Insulation Thickness	0.5			mm
RIO	Insulation Resistance at Ts, V_{IO} = 500V	10^9			Ω

Typical Performance Curves

Fig. 1 LED Forward Voltage vs. Forward Current

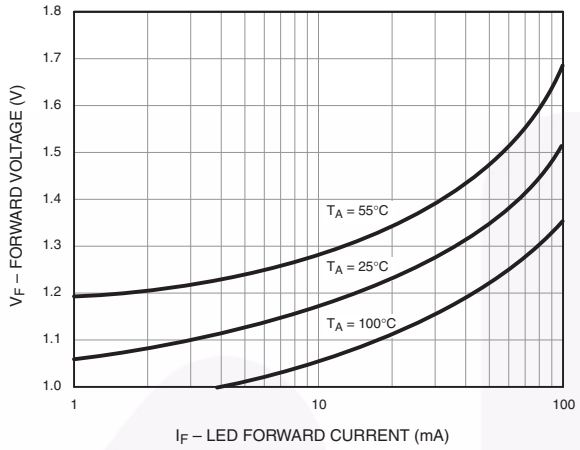

Fig. 2 Normalized CTR vs. Forward Current

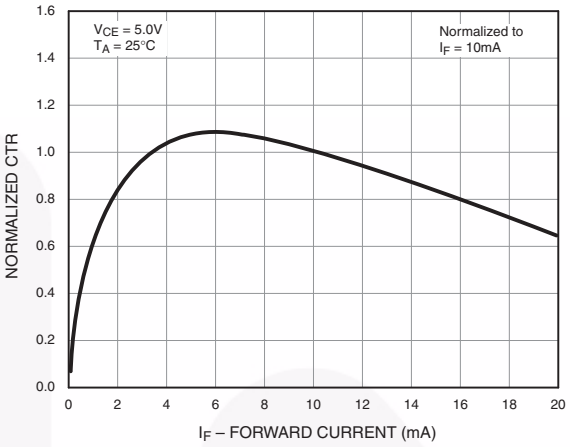

Fig. 3 Normalized CTR vs. Ambient Temperature

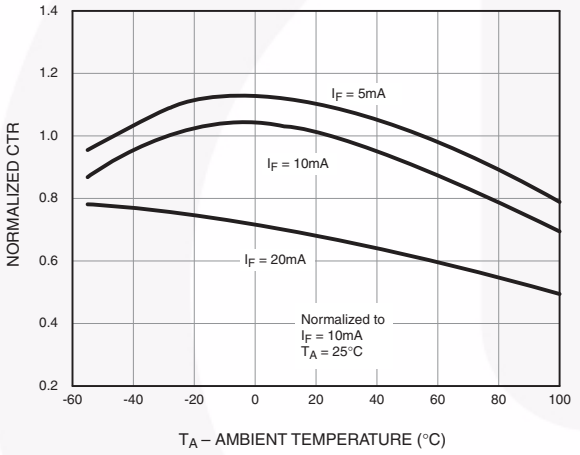

Fig. 4 CTR vs. RBE (Unsaturated)

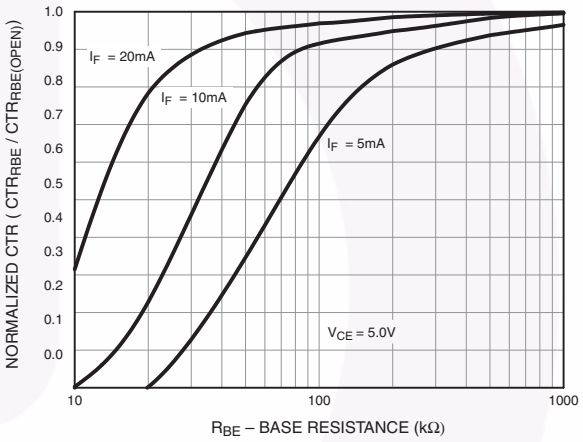

Fig. 5 CTR vs. RBE (Saturated)

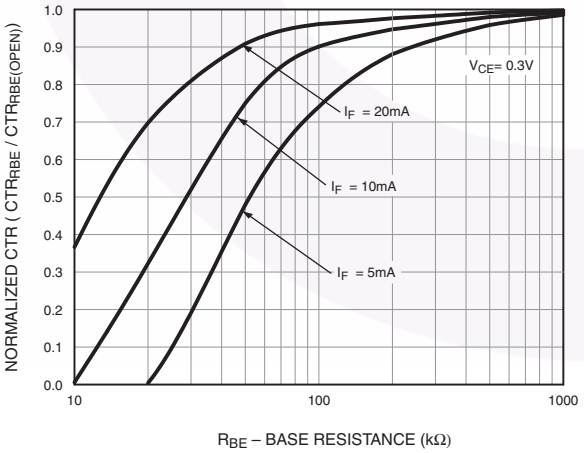

Fig. 6 Collector-Emitter Saturation Voltage vs Collector Current

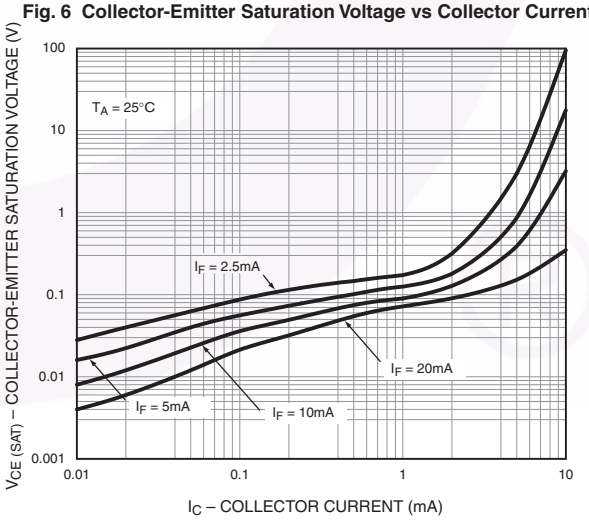

Typical Performance Curves (Continued)

Fig. 7 Switching Speed vs. Load Resistor

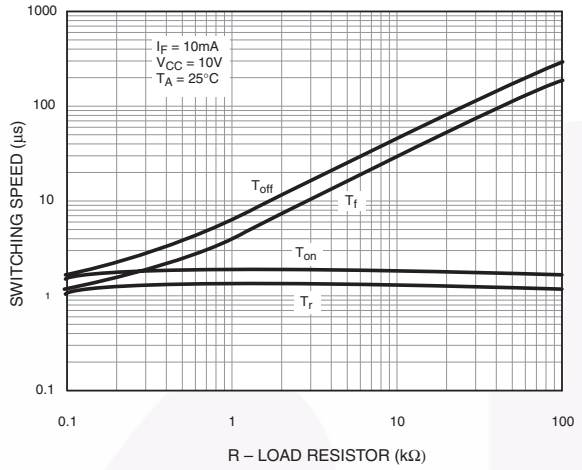

Fig. 8 Normalized t_{on} vs. R_{BE}

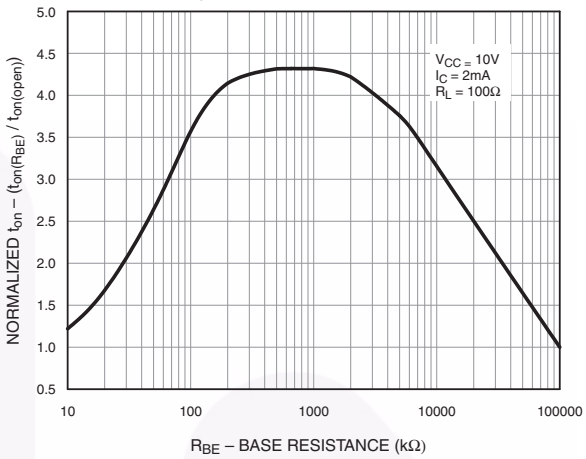

Fig. 9 Normalized t_{off} vs. R_{BE}

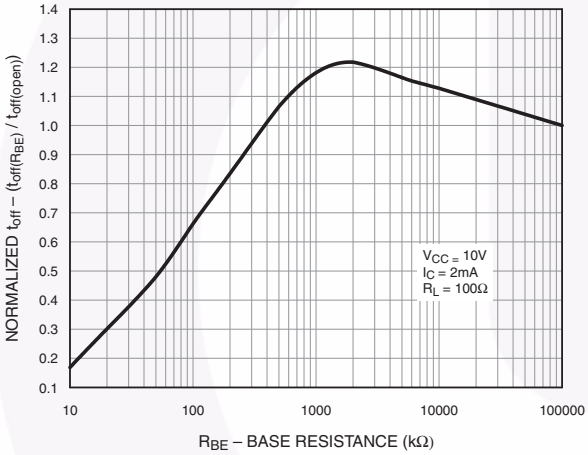

Fig. 10 Dark Current vs. Ambient Temperature

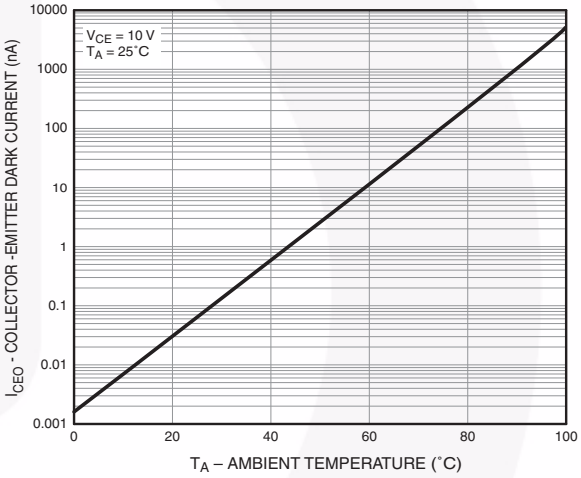

Typical Electro-Optical Characteristics

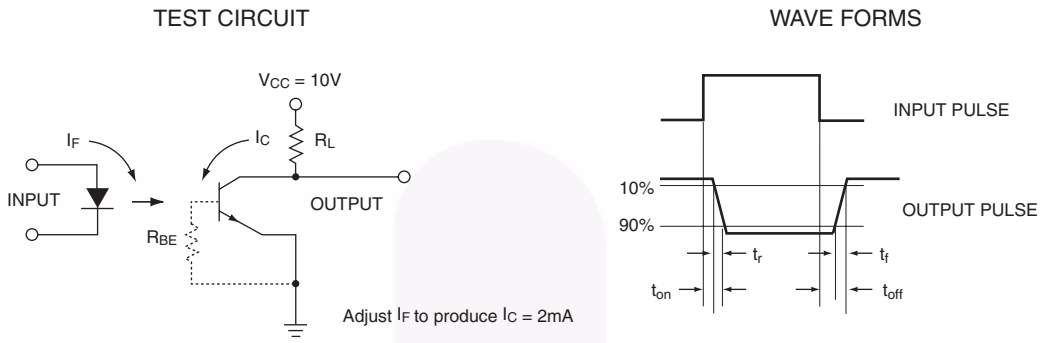

Figure 11. Switching Time Test Circuit and Waveforms

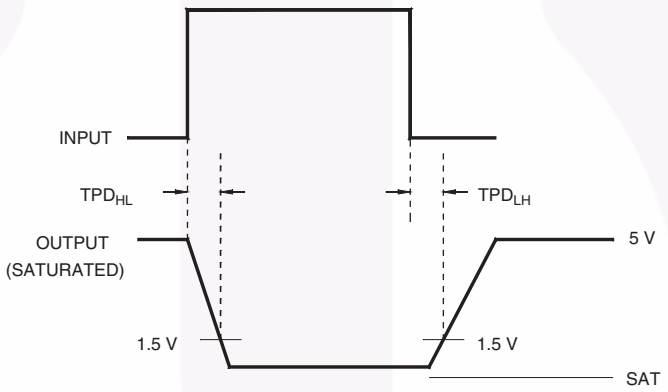

Figure 12. Switching Time Waveforms (MCT210M)

Ordering Information

Option	Order Entry Identifier (Example)	Description
No suffix	MCT2M	Standard Through Hole Device (50 units per tube)
S	MCT2SM	Surface Mount Lead Bend
SR2	MCT2SR2M	Surface Mount; Tape and Reel (1,000 units per reel)
T	MCT2TM	0.4" Lead Spacing
V	MCT2VM	IEC60747-5-2
TV	MCT2TVM	IEC60747-5-2, 0.4" Lead Spacing
SV	MCT2SVM	IEC60747-5-2, Surface Mount
SR2V	MCT2SR2VM	IEC60747-5-2, Surface Mount, Tape and Reel (1,000 units per reel)

Marking Information

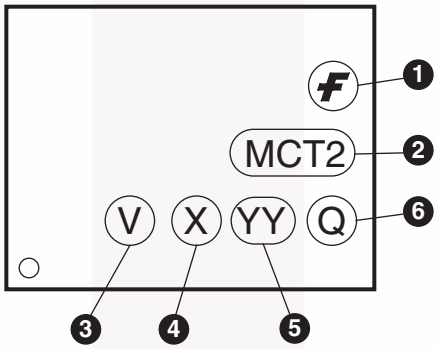

Definitions	
1	Fairchild logo
2	Device number
3	VDE mark (Note: Only appears on parts ordered with VDE option – See order entry table)
4	One digit year code, e.g., ‘7’
5	Two digit work week ranging from ‘01’ to ‘53’
6	Assembly package code

*Note – Parts that do not have the ‘V’ option (see definition 3 above) that are marked with date code ‘325’ or earlier are marked in portrait format.

Carrier Tape Specification

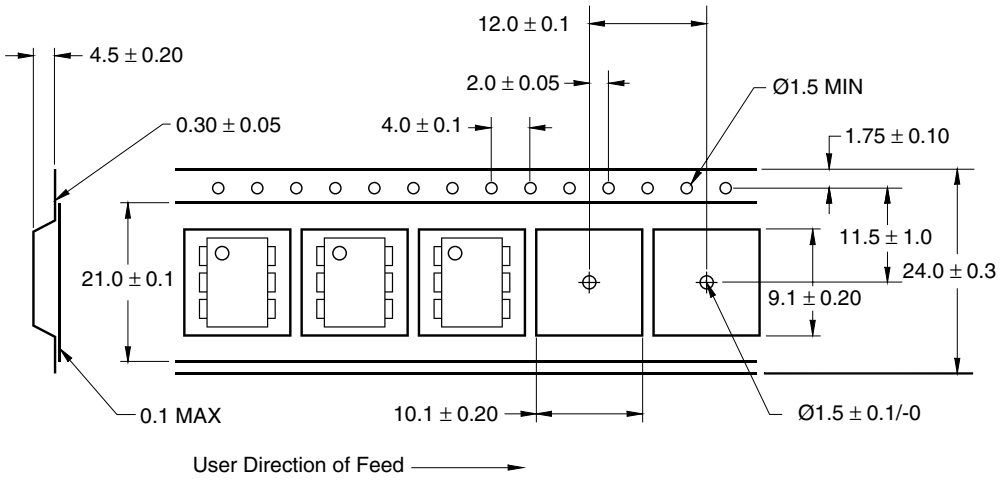

Reflow Profile

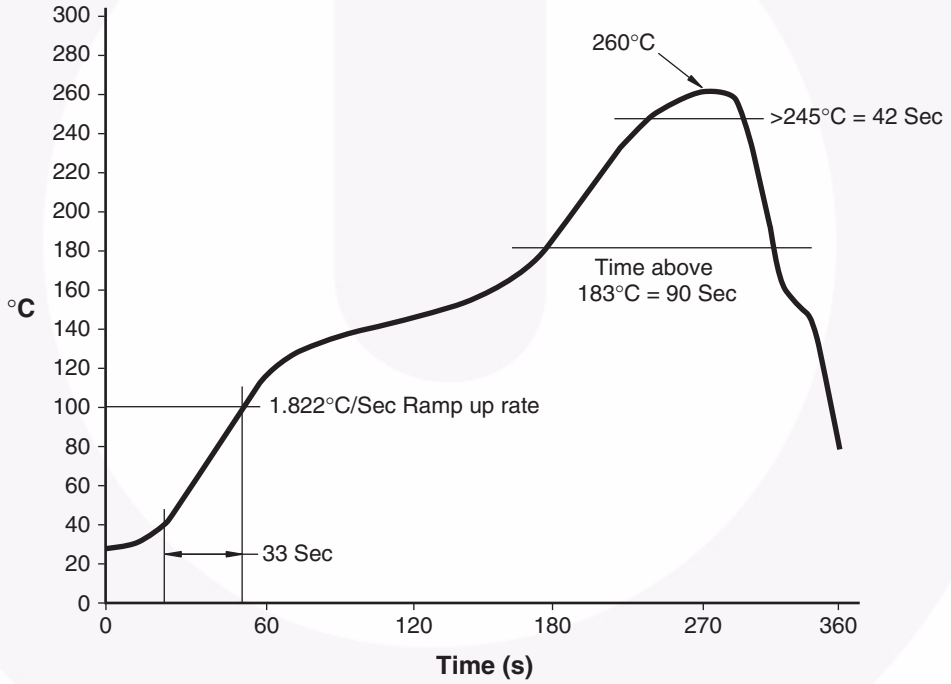

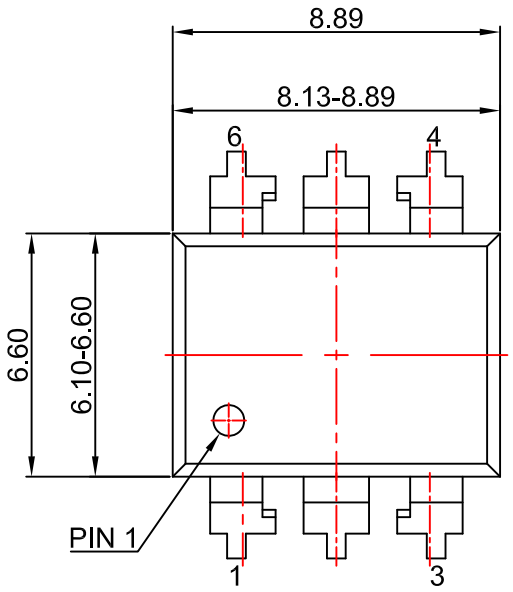

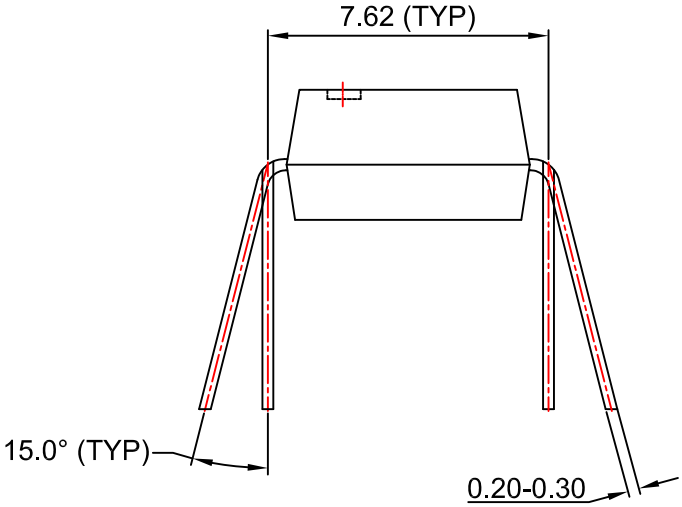

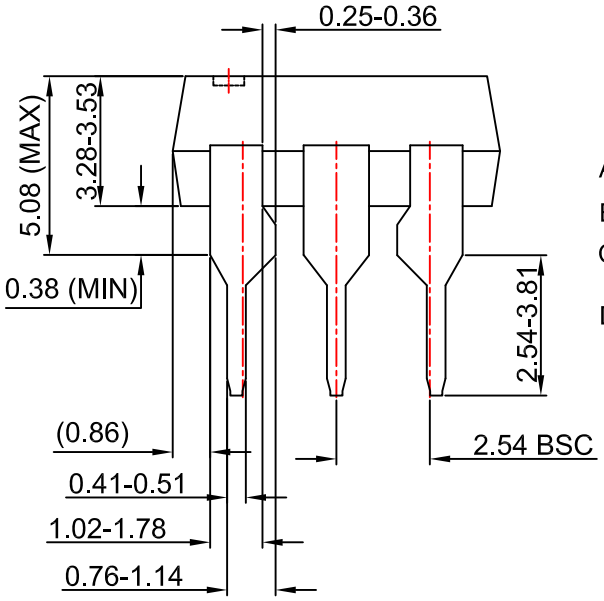

NOTES:

A) NO STANDARD APPLIES TO THIS PACKAGE.

B) ALL DIMENSIONS ARE IN MILLIMETERS.

C) DIMENSIONS ARE EXCLUSIVE OF BURRS, MOLD FLASH, AND TIE BAR EXTRUSION

D) DRAWING FILENAME AND REVSION: MKT-N06BREV4.

FAIRCHILD

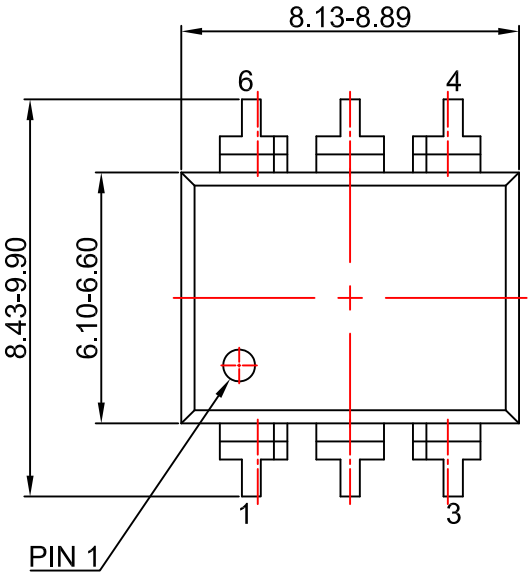

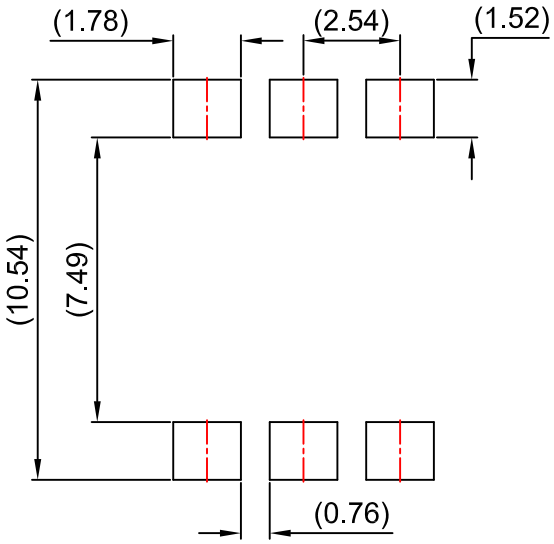

LAND PATTERN RECOMMENDATION

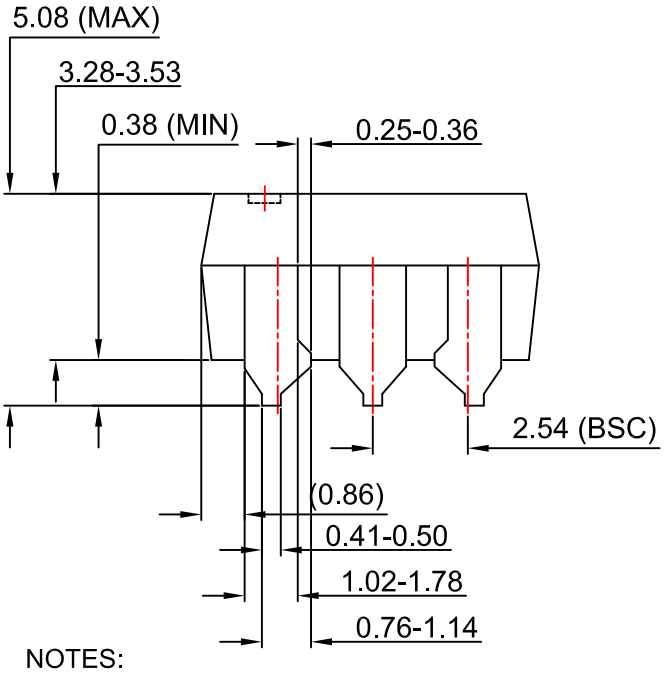

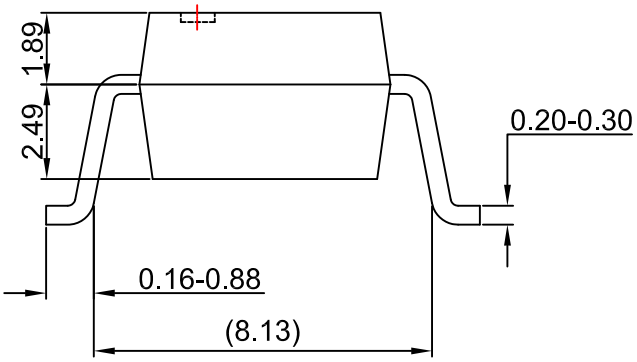

NOTES:

A) NO STANDARD APPLIES TO THIS PACKAGE.

B) ALL DIMENSIONS ARE IN MILLIMETERS.

C) DIMENSIONS ARE EXCLUSIVE OF BURRS,
MOLD FLASH, AND TIE BAR EXTRUSION

D) DRAWING FILENAME AND REVSION : MKT-N06CREV4.

FAIRCHILD

TRADEMARKS

The following includes registered and unregistered trademarks and service marks, owned by Fairchild Semiconductor and/or its global subsidiaries, and is not intended to be an exhaustive list of all such trademarks.

AccuPower™
AttitudeEngine™
Awinda®
AX-CAP®*
BitSiC™
Build it Now™
CorePLUS™
CorePOWER™
CROSSVOLT™
CTL™
Current Transfer Logic™
DEUXPEED®
Dual Cool™
EcoSPARK®
EfficientMax™
ESBC™
®
Fairchild®
Fairchild Semiconductor®
FACT Quiet Series™
FACT®
FastvCore™
FETBench™
FPS™
F-PFS™
FRFET®
Global Power Resource℠
GreenBridge™
Green FPS™
Green FPS™ e-Series™
G*max*™
GTO™
IntelliMAX™
ISOPLANAR™
Making Small Speakers Sound Louder and Better™
MegaBuck™
MICROCOUPLER™
MicroFET™
MicroPak™
MicroPak2™
MillerDrive™
MotionMax™
MotionGrid®
MTi®
MTx®
MVN®
mWSaver®
OptoHiT™
OPTOLOGIC®
OPTOPLANAR®
®
Power Supply WebDesigner™
PowerTrench®
PowerXS™
Programmable Active Droop™
QFET®
QS™
Quiet Series™
RapidConfigure™
™
Saving our world, 1mW/W/kW at a time™
SignalWise™
SmartMax™
SMART START™
Solutions for Your Success™
SPM®
STEALTH™
SuperFET®
SuperSOT™-3
SuperSOT™-6
SuperSOT™-8
SupreMOS®
SyncFET™
Sync-Lock™
SYSTEM GENERAL®*
TinyBoost®
TinyBuck®
TinyCalc™
TinyLogic®
TINYOPTO™
TinyPower™
TinyPWM™
TinyWire™
TranSiC™
TriFault Detect™
TRUECURRENT®*
µSerDes™
µSerDes™
UHC®
Ultra FRFET™
UniFET™
VCX™
VisualMax™
VoltagePlus™
XS™
Xsens™
仙童®

* Trademarks of System General Corporation, used under license by Fairchild Semiconductor.

DISCLAIMER

FAIRCHILD SEMICONDUCTOR RESERVES THE RIGHT TO MAKE CHANGES WITHOUT FURTHER NOTICE TO ANY PRODUCTS HEREIN TO IMPROVE RELIABILITY, FUNCTION, OR DESIGN. TO OBTAIN THE LATEST, MOST UP-TO-DATE DATASHEET AND PRODUCT INFORMATION, VISIT OUR WEBSITE AT HTTP://WWW.FAIRCHILDSEMI.COM. FAIRCHILD DOES NOT ASSUME ANY LIABILITY ARISING OUT OF THE APPLICATION OR USE OF ANY PRODUCT OR CIRCUIT DESCRIBED HEREIN; NEITHER DOES IT CONVEY ANY LICENSE UNDER ITS PATENT RIGHTS, NOR THE RIGHTS OF OTHERS. THESE SPECIFICATIONS DO NOT EXPAND THE TERMS OF FAIRCHILD'S WORLDWIDE TERMS AND CONDITIONS, SPECIFICALLY THE WARRANTY THEREIN, WHICH COVERS THESE PRODUCTS.

AUTHORIZED USE

Unless otherwise specified in this data sheet, this product is a standard commercial product and is not intended for use in applications that require extraordinary levels of quality and reliability. This product may not be used in the following applications, unless specifically approved in writing by a Fairchild officer: (1) automotive or other transportation, (2) military/aerospace, (3) any safety critical application – including life critical medical equipment – where the failure of the Fairchild product reasonably would be expected to result in personal injury, death or property damage. Customer's use of this product is subject to agreement of this Authorized Use policy. In the event of an unauthorized use of Fairchild's product, Fairchild accepts no liability in the event of product failure. In other respects, this product shall be subject to Fairchild's Worldwide Terms and Conditions of Sale, unless a separate agreement has been signed by both Parties.

ANTI-COUNTERFEITING POLICY

Fairchild Semiconductor Corporation's Anti-Counterfeiting Policy. Fairchild's Anti-Counterfeiting Policy is also stated on our external website, www.fairchildsemi.com, under Terms of Use

Counterfeiting of semiconductor parts is a growing problem in the industry. All manufacturers of semiconductor products are experiencing counterfeiting of their parts. Customers who inadvertently purchase counterfeit parts experience many problems such as loss of brand reputation, substandard performance, failed applications, and increased cost of production and manufacturing delays. Fairchild is taking strong measures to protect ourselves and our customers from the proliferation of counterfeit parts. Fairchild strongly encourages customers to purchase Fairchild parts either directly from Fairchild or from Authorized Fairchild Distributors who are listed by country on our web page cited above. Products customers buy either from Fairchild directly or from Authorized Fairchild Distributors are genuine parts, have full traceability, meet Fairchild's quality standards for handling and storage and provide access to Fairchild's full range of up-to-date technical and product information. Fairchild and our Authorized Distributors will stand behind all warranties and will appropriately address any warranty issues that may arise. Fairchild will not provide any warranty coverage or other assistance for parts bought from Unauthorized Sources. Fairchild is committed to combat this global problem and encourage our customers to do their part in stopping this practice by buying direct or from authorized distributors.

PRODUCT STATUS DEFINITIONS

Definition of Terms

Datasheet Identification	Product Status	Definition
Advance Information	Formative / In Design	Datasheet contains the design specifications for product development. Specifications may change in any manner without notice.
Preliminary	First Production	Datasheet contains preliminary data; supplementary data will be published at a later date. Fairchild Semiconductor reserves the right to make changes at any time without notice to improve design.
No Identification Needed	Full Production	Datasheet contains final specifications. Fairchild Semiconductor reserves the right to make changes at any time without notice to improve the design.
Obsolete	Not In Production	Datasheet contains specifications on a product that is discontinued by Fairchild Semiconductor. The datasheet is for reference information only.

Rev. I77