Excellent Integrated System Limited

Stocking Distributor

Click to view price, real time Inventory, Delivery & Lifecycle Information:

Vishay Semiconductor/Opto Division
SFH6138

For any questions, you can email us directly:
sales@integrated-circuit.com

Distributor of Vishay Semiconductor/Opto Division: Excellent Integrated System Limited
Datasheet of SFH6138 - OPTOISO 5.3KV DARL W/BASE 8DIP
Contact us: sales@integrated-circuit.com Website: www.integrated-circuit.com

High Speed Optocoupler, 100 kBd, Low Input Current, High Gain

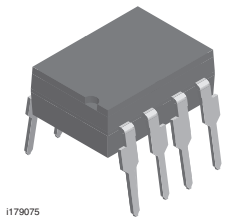

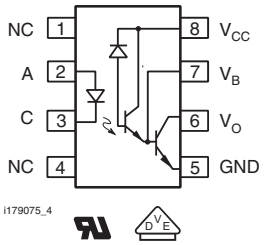

DESCRIPTION

High common mode transient immunity and very high current ratio together with 5300 V_{RMS} insulation are achieved by coupling an LED with an integrated high gain photon detector in an eight pin dual-in-line package. Separate pins for the photo diode and output stage enable TTL compatible saturation voltages with high speed operation.

Photodarlington operation is achieved by tying the V_{CC} and V_O terminals together. Access to the base terminal allows adjustment to the gain bandwidth.

The SFH6138 is ideal for TTL applications since the 300 % minimum current transfer ratio with an LED current of 1.6 mA enables operation with one unit load-in and one unit load-out with a 2.2 kΩ pull-up resistor.

The SFH6139 is best suited for low power logic applications involving CMOS and low power TTL. A 400 % current transfer ratio with only 0.5 mA of LED current is guaranteed from 0 °C to 70 °C.

FEATURES

- High current transfer ratio, 800 %
- Low input current requirement, 0.5 mA
- High output current, 60 mA
- Isolation test voltage, 5300 V_{RMS}
- TTL compatible output, V_{OL} = 0.1 V
- High common mode rejection, 500 V/µs
- DC to 0.1 megabit/s operation
- Adjustable bandwidth access to base
- Standard molded DIP plastic package
- Compliant to RoHS Directive 2002/95/EC and in accordance to WEEE 2002/96/EC

Pb-free
e3
RoHS COMPLIANT

APPLICATIONS

- Logic ground isolation-TTL/TTL, TTL/CMOS, CMOS/CMOS, CMOS/TTL
- EIA RS 232 C line receiver
- Low input current line receiver-long lines, party lines
- Telephone ring detector
- 117 V_{AC} line voltage status indication-low input power dissipation
- Low power systems-ground isolation

AGENCY APPROVALS

- UL1577, file no. E52744 system code H or J, double protection
- DIN EN 60747-5-5 (VDE 0884) available with option 1

ORDERING INFORMATION

S	F	H	6	1	3	#	-	X	0	#	#	T

PART NUMBER — PACKAGE OPTION — TAPE AND REEL

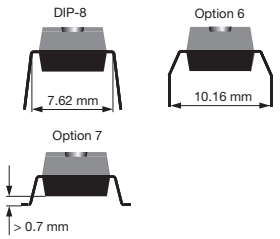

AGENCY CERTIFIED/PACKAGE	CTR (%)	
UL	≥ **300**	≥ **500**
DIP-8	SFH6138	SFH6139
DIP-8, option 6	SFH6138-X006	SFH6139-X006
VDE, UL	≥ **300**	≥ **500**
SMD-8, option 7	SFH6138-X017T (1)	SFH6139-X017T (1)

Note

(1) Also available in tubes; do not add T to end

SFH6138, SFH6139

Vishay Semiconductors High Speed Optocoupler, 100 kBd, Low Input Current, High Gain

ABSOLUTE MAXIMUM RATINGS (T_{amb} = 25 °C, unless otherwise specified)					
PARAMETER	**TEST CONDITION**	**PART**	**SYMBOL**	**VALUE**	**UNIT**
INPUT					
Reverse voltage				5	V
Average current			$I_{F(AVG)}$	20	mA
Peak current	50 % duty cycle - 1 ms pulse width			40	mA
Peak transient current	t ≤ 1 µs, 300 pps			1	A
OUTPUT					
Supply and output voltage	V_{CC} (pin 8-5), V_O (pin 6-5)	SFH6138	V_S, V_O	- 0.5 to 7	V
		SFH6139	V_S, V_O	- 0.5 to 18	V
Emitter base reverse voltage (pin 5 to 7)			V_{EBO}	0.5	V
Output current IO (pin 6)			I_O	60	mA
Derate linearly above 25 °C, free air temperature				0.7	mA/°C
Input power dissipation			$P_{diss\ IN}$	35	mW
Derate linearly above 50 °C, free air temperature				0.7	mW/°C
Output power dissipation			$P_{diss\ OUT}$	100	mW
Derate linearly above 25 °C, free air temperature				0.2	mA/°C
COUPLER					
Isolation test voltage	t = 1 s		V_{ISO}	5300	V_{RMS}
Isolation resistance	V_{IO} = 500 V, T_{amb} = 100 °C		R_{IO}	$\geq 10^{11}$	Ω
	V_{IO} = 500 V, T_{amb} = 25 °C		R_{IO}	$\geq 10^{12}$	Ω
Storage temperature range			T_{stg}	- 55 to + 125	°C
Ambient temperature range			T_{amb}	- 55 to + 100	°C
Lead soldering temperature [1]	t = 10 s		T_{sld}	260	°C

Notes

- Stresses in excess of the absolute maximum ratings can cause permanent damage to the device. Functional operation of the device is not implied at these or any other conditions in excess of those given in the operational sections of this document. Exposure to absolute maximum ratings for extended periods of the time can adversely affect reliability.

(1) Refer to wave profile for soldering conditions for through hole devices.

ELECTRICAL CHARACTERISTICS (T_{amb} = 25 °C, unless otherwise specified)							
PARAMETER	**TEST CONDITION**	**PART**	**SYMBOL**	**MIN.**	**TYP.**	**MAX.**	**UNIT**
INPUT							
Forward voltage	I_F = 16 mA		V_F		1.4	1.7	V
Reverse breakdown voltage	I_R = 10 µA		BV_R	5			V
Temperature coefficient of forward voltage	I_F = 1.6 mA				- 1.8		mV/°C
OUTPUT							
Logic low output voltage [1]	I_F = 16 mA, I_O = 4.8 mA, V_{CC} = 4.5 V	SFH6138	V_{OL}		0.1	0.4	V
	I_F = 16 mA, I_O = 8 mA, V_{CC} = 4.5 V	SFH6139	V_{OL}		0.1	0.4	V
Logic low output voltage	I_F = 5 mA, I_O = 15 mA, V_{CC} = 4.5 V	SFH6139	V_{OL}		0.15	0.4	V
	I_F = 12 mA, I_O = 24 mA, V_{CC} = 4.5 V	SFH6139	V_{OL}		0.25	0.4	V
Logic high output current [1]	I_F = 0 mA, V_O = V_{CC} = 7 V	SFH6138	I_{OH}		0.1	250	µA
	I_F = 0 mA, V_O = V_{CC} = 18 V	SFH6139	I_{OH}		0.05	100	µA
Logic low supply current [1]	I_F = 1.6 mA, V_O = open, V_{CC} = 18 V		I_{CCL}		0.2	1.5	mA
Logic high supply current	I_F = 0 mA, V_O = open, V_{CC} = 18 V		I_{CCH}		0.001	10	µA

ELECTRICAL CHARACTERISTICS (T_{amb} = 25 °C, unless otherwise specified)							
PARAMETER	**TEST CONDITION**	**PART**	**SYMBOL**	**MIN.**	**TYP.**	**MAX.**	**UNIT**
COUPLER							
Input capacitance	f = 1 MHz, V_F = 0		C_{IN}		25		pF
Capacitance (input to output) (2)	f = 1 MHz		C_O		0.6		pF

Notes

- Minimum and maximum values are testing requirements. Typical values are characteristics of the device and are the result of engineering evaluation. Typical values are for information only and are not part of the testing requirements.

(1) Pin 7 open.

(2) Device considered a two-terminal device: pins 1, 2, 3 and 4 shorted together and pins 5, 6, 7, and 8 shorted together.

CURRENT TRANSFER RATIO							
PARAMETER	**TEST CONDITION**	**PART**	**SYMBOL**	**MIN.**	**TYP.**	**MAX.**	**UNIT**
Current transfer ratio (1)	I_F = 1.6 mA, V_O = 0.4 V, V_{CC} = 4.5 V	SFH6138	CTR	300	1600		%
		SFH6139	CTR	400	1600		%
Current transfer ratio	I_F = 1.6 mA, V_O = 0.4 V, V_{CC} = 4.5 V	SFH6139	CTR	500	2000		%

Note

(1) DC current transfer ratio is defined as the ratio of output collector current, I_O, to the forward LED input current, I_F times 100 %. Pin 7 open.

SWITCHING CHARACTERISTICS							
PARAMETER	**TEST CONDITION**	**PART**	**SYMBOL**	**MIN.**	**TYP.**	**MAX.**	**UNIT**
Propagation delay time to logic low at output	I_F = 1.6 mA, R_L = 2.2 kΩ	SFH6138	t_{PHL}		2	10	µs
	I_F = 0.5 mA, R_L = 4.7 kΩ	SFH6139	t_{PHL}		6	25	µs
	I_F = 12 mA, R_L = 270 Ω	SFH6139	t_{PHL}		0.6	1	µs
Propagation delay time to logic high at output (1)	I_F = 1.6 mA, R_L = 2.2 kΩ	SFH6138	t_{PLH}		4	35	µs
	I_F = 0.5 mA, R_L = 4.7 kΩ	SFH6139	t_{PLH}		5	60	µs
	I_F = 12 mA, R_L = 270 Ω	SFH6139	t_{PLH}		1	7	µs

Note

(1) Pin 7 open. Using a resistor between pin 5 and 7 will decrease gain and delay time.

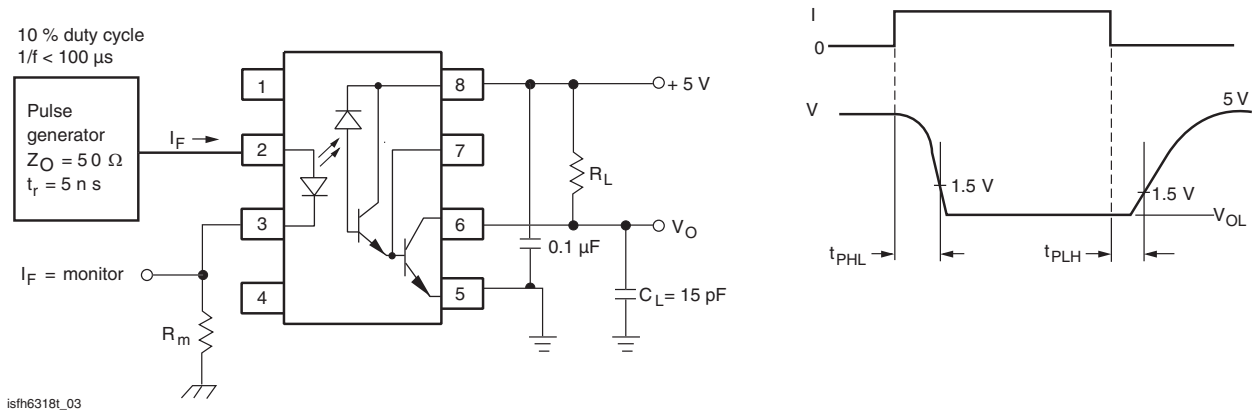

Fig. 1 - Switching Test Circuit

COMMON MODE TRANSIENT IMMUNITY						
PARAMETER	TEST CONDITION	SYMBOL	MIN.	TYP.	MAX.	UNIT
Common mode transient immunity at logic high level output (1)	I_F = 0 mA, R_L = 2.2 kΩ, R_{CC} = 0, V_{CM} = 10 V_{P-P}	CM_H		500		V/µs
Common mode transient immunity at logic low level output (1)	I_F = 16 mA, R_L = 2.2 kΩ, R_{CC} = 0, V_{CM} = 10 V_{P-P}	CM_H		- 500		V/µs

Note

(1) Common mode transient immunity in logic high level is the maximum tolerable (positive) dV_{cm}/dt on the leading edge of the common mode pulse, V_{CM}, to assure that the output will remain in a logic high state (i.e.V_O > 2 V) common mode transient immunity in logic low level is the maximum tolerable (negative) dV_{cm}/dt on the trailing edge of the common mode pulse signal, V_{CM}, to assure that the output will remain in a logic low state (i.e. V_O < 0.8 V).
In applications where dv/dt may exceed 50 000 V/µs (such as state discharge a series resistor, R_{CC} should be included to protect I_C from destructively high surge currents. The recommended value is $R_{CC} \cong [IV/0.15\ I_F(mA)]$ kΩ

SAFETY AND INSULATION RATINGS						
PARAMETER	TEST CONDITION	SYMBOL	MIN.	TYP.	MAX.	UNIT
Climatic classification (according to IEC 68 part 1)				55/100/21		
Comparative tracking index		CTI	175		399	
V_{IOTM}			8000			V
V_{IORM}			890			V
P_{SO}					500	mW
I_{SI}					300	mA
T_{SI}					175	°C
Creepage distance	Standard DIP-8		7			mm
Clearance distance	Standard DIP-8		7			mm
Creepage distance	400 mil DIP-8		8			mm
Clearance distance	400 mil DIP-8		8			mm

Note

- As per IEC 60747-5-5, §7.4.3.8.1, this optocoupler is suitable for “safe electrical insulation” only within the safety ratings. Compliance with the safety ratings shall be ensured by means of protective circuits.

PACKAGE DIMENSIONS in millimeters

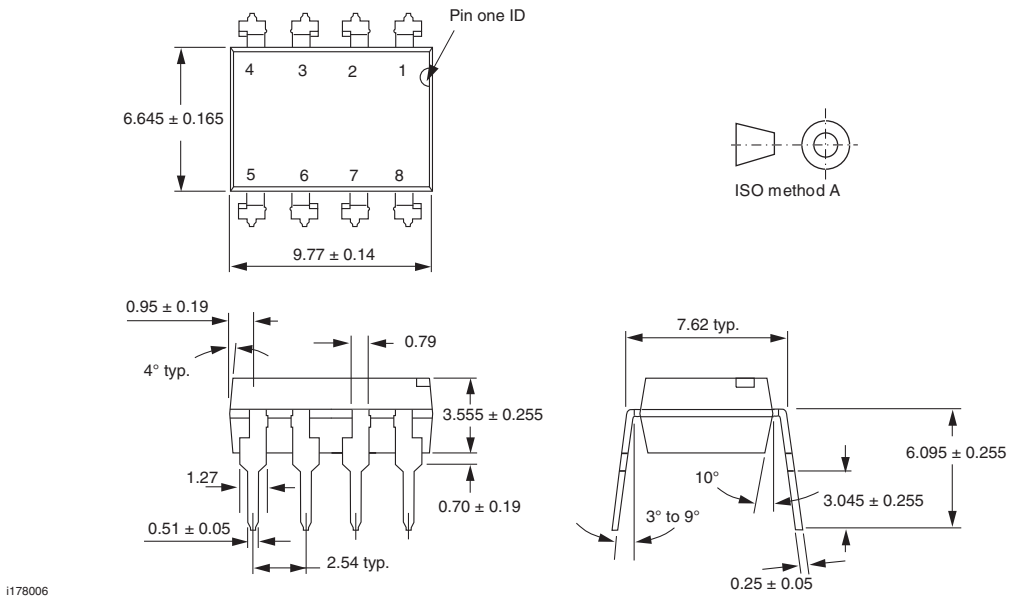

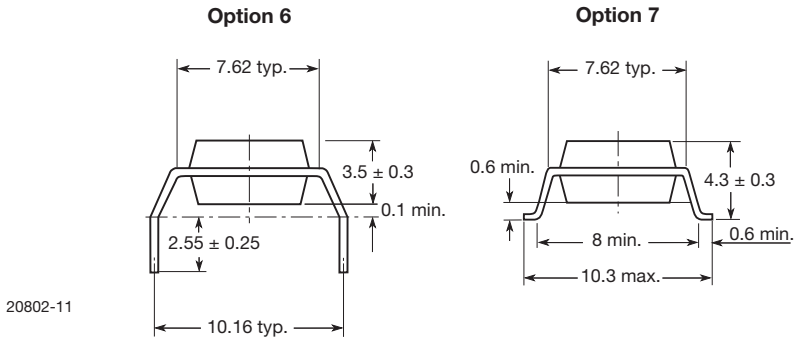

PACKAGE MARKING

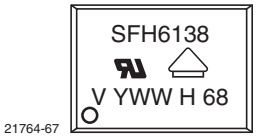

Disclaimer

ALL PRODUCT, PRODUCT SPECIFICATIONS AND DATA ARE SUBJECT TO CHANGE WITHOUT NOTICE TO IMPROVE RELIABILITY, FUNCTION OR DESIGN OR OTHERWISE.

Vishay Intertechnology, Inc., its affiliates, agents, and employees, and all persons acting on its or their behalf (collectively, “Vishay”), disclaim any and all liability for any errors, inaccuracies or incompleteness contained in any datasheet or in any other disclosure relating to any product.

Vishay makes no warranty, representation or guarantee regarding the suitability of the products for any particular purpose or the continuing production of any product. To the maximum extent permitted by applicable law, Vishay disclaims (i) any and all liability arising out of the application or use of any product, (ii) any and all liability, including without limitation special, consequential or incidental damages, and (iii) any and all implied warranties, including warranties of fitness for particular purpose, non-infringement and merchantability.

Statements regarding the suitability of products for certain types of applications are based on Vishay’s knowledge of typical requirements that are often placed on Vishay products in generic applications. Such statements are not binding statements about the suitability of products for a particular application. It is the customer’s responsibility to validate that a particular product with the properties described in the product specification is suitable for use in a particular application. Parameters provided in datasheets and / or specifications may vary in different applications and performance may vary over time. All operating parameters, including typical parameters, must be validated for each customer application by the customer’s technical experts. Product specifications do not expand or otherwise modify Vishay’s terms and conditions of purchase, including but not limited to the warranty expressed therein.

Except as expressly indicated in writing, Vishay products are not designed for use in medical, life-saving, or life-sustaining applications or for any other application in which the failure of the Vishay product could result in personal injury or death. Customers using or selling Vishay products not expressly indicated for use in such applications do so at their own risk. Please contact authorized Vishay personnel to obtain written terms and conditions regarding products designed for such applications.

No license, express or implied, by estoppel or otherwise, to any intellectual property rights is granted by this document or by any conduct of Vishay. Product names and markings noted herein may be trademarks of their respective owners.