Excellent Integrated System Limited

Stocking Distributor

Click to view price, real time Inventory, Delivery & Lifecycle Information:

TE Connectivity AMP Connectors
788362-1

For any questions, you can email us directly:
sales@integrated-circuit.com

THIS DRAWING IS UNPUBLISHED. RELEASED FOR PUBLICATION 19
(C) COPYRIGHT 19 BY AMP INCORPORATED. ALL RIGHTS RESERVED.

LOC BD DIST 84

REVISIONS

F	LTR	DESCRIPTION	DATE	DWN	APVD
	O	RLSE PER NPR 142, WAS 98-2198-3	11SEP98	-	-
	A	REVISED PER EC 0G40-0070-99	27APR99	SW	RB

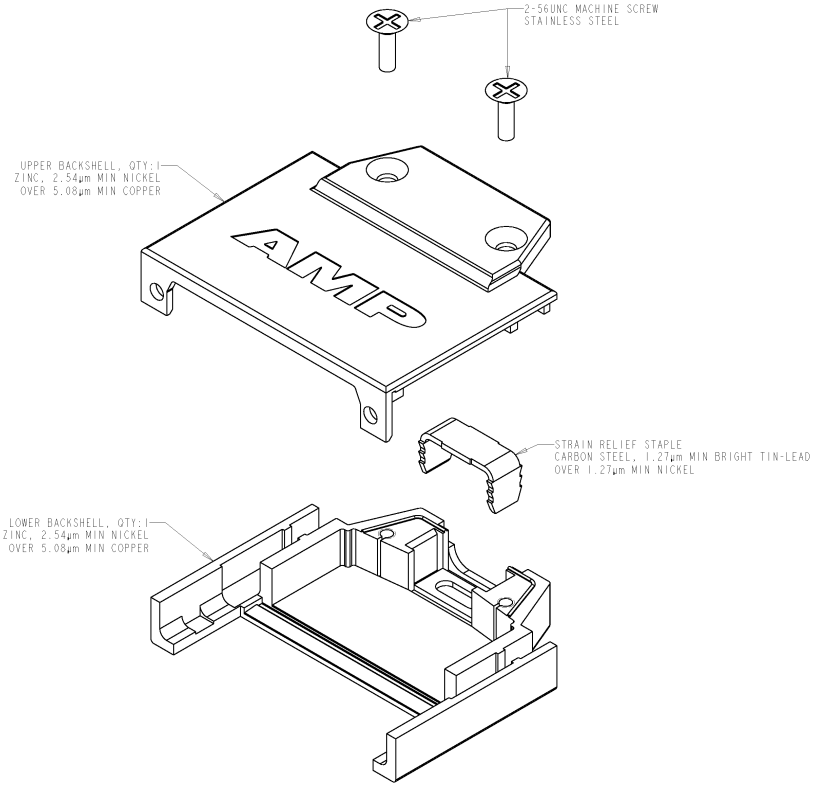

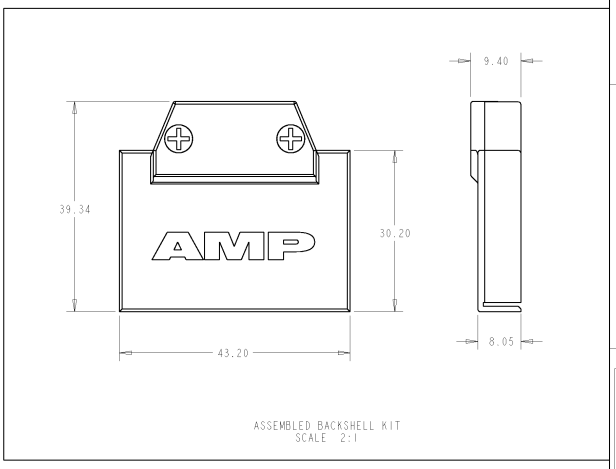

ASSEMBLED BACKSHELL KIT
SCALE 2:1

ASSEMBLY INSTRUCTIONS:

1. CABLE PREP LENGTH = 23.5mm
2. WIRE BRAID SHOULD BE ROLED BACK AND TRIMMED TO A MINIMUM OF 6.5mm
3. USE STRAIN RELIEF STAPLE TO ATTACH CABLE TO LOWER BACKSHELL
   - UPPER SURFACE OF STAPLE MUST BE BELOW THE MATING SURFACE OF THE TWO HALVES
   - INSERT STAPLE IN INCREMENTS, UNITL THE WIRES BETWEEN THE TERMINATION POINT AND STAPLE DO NOT MOVE WHEN GENTLY TWISTING THE CABLE BUNDLE
4. PLACE JACKSCREWS IN PROPER LOCATION
5. ATTACH UPPER BACKSHELL USING THE TWO MACHINE SCREWS

788362-1
PART NUMBER

THIS DRAWING IS A CONTROLLED DOCUMENT FOR AMP INCORPORATED. IT IS SUBJECT TO CHANGE AND TO CONTROL AND ENFORCEMENT. ORGANIZATION SHOULD BE CONTACTED FOR THE LATEST REVISION.

DIMENSIONS: mm

TOLERANCES UNLESS OTHERWISE SPECIFIED:
0 PLC ±-
1 PLC ±-
2 PLC ±0.13
3 PLC ±-
4 PLC ±-
ANGLES ±-

MATERIAL - SEE CALLOUTS
FINISH - SEE CALLOUTS

DWN S. WELDON 24APR98
CHK R. STONE 24APR98
APVD T. BARR 24APR98
PRODUCT SPEC -
APPLICATION SPEC -
WEIGHT -
CUSTOMER DRAWING

AMP Incorporated
Harrisburg, PA 17105-3608

NAME BACKSHELL KIT, UNASSEMBLED, 68 POSN, CHAMP 0.8mm

SIZE A2 | CAGE CODE 00779 | DRAWING NO C-788362 | RESTRICTED TO -
SCALE 3:1 | SHEET 1 OF 1 | REV A

AMP 1471-9 REV 27JUN96

Pro/ENGINEER DRAWING