Excellent Integrated System Limited

Stocking Distributor

Click to view price, real time Inventory, Delivery & Lifecycle Information:

Diodes Incorporated
ZXRE250ASA-7

For any questions, you can email us directly:
sales@integrated-circuit.com

NEW PRODUCT

ZXRE250/ZXRE252

VERY LOW CATHODE CURRENT ADJUSTABLE PRECISION SHUNT REGULATOR

Description

The ZXRE250 and ZXRE252 are three terminal adjustable shunt regulators offering excellent temperature stability and output current handling capability up to 100mA. The output voltage may be set to any chosen voltage between 2.5 and 36 volts by selection of two external divider resistors.

ZXRE250 has the same electrical specifications as the industry standard '431 except that it features a very low minimum cathode current for regulation. The typical value of 40µA makes the parts ideal for very low power applications.

The devices can be used as a replacement for zener diodes in many applications requiring an improvement in zener performance. The ZXRE250/2 is available in 2 grades with initial tolerances of 1% and 0.5% for the A and B grades respectively.

Features

- Minimum cathode current for regulation: 40µA (typ)
- Temperature range -40 to 125ºC
- Reference Voltage Tolerance at 25°C
  - o ZXRE250A: 2.495V ± 1.0%.
  - o ZXRE250B: 2.495V ± 0.5%
- Low Output Noise
- 0.2Ω Typical Output Impedance
- Sink Current Capability: 0.065mA to 100mA
- Adjustable Output Voltage: V_{REF} to 36V
- SOT23 and SOT25: Available in "Green" Molding Compound (No Br, Sb) and Lead Free Finish/ RoHS Compliant (Note 1)

Applications

- Opto-Coupler Linearisers
- Shunt Regulators
- Improved Zener
- Variable Reference

Pin Assignments

ZXRE250

(Top View)

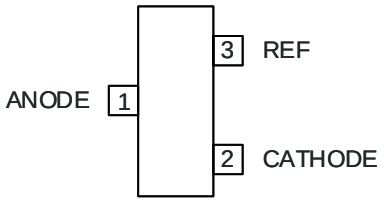

SOT23

(Top View)

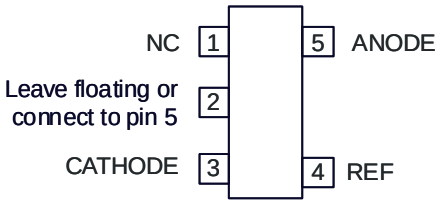

SOT25

ZXRE252

(Top View)

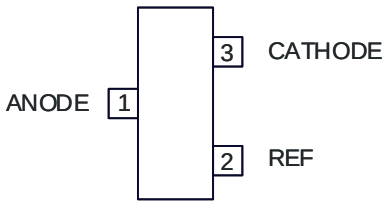

SOT23

Notes: 1. EU Directive 2002/95/EC (RoHS). All applicable RoHS exemptions applied. Please visit our website at http://www.diodes.com/products/lead_free.html.

© Diodes Incorporated

NEW PRODUCT

Absolute Maximum Ratings (Note 2)

Symbol	Parameter		Rating	Unit
V_{KA}	Cathode Voltage		40	V
I_{KA}	Continuous Cathode Current		150	mA
I_{REF}	Reference Input Current		-0.050 to +10	mA
T_J	Operating Junction Temperature		+150	°C
T_{ST}	Storage Temperature		-55 to +150	°C
P_D	Power Dissipation (Notes 3, 4)	SOT23	330	mW
		SOT25	500	mW

Notes: 2. Operation above the absolute maximum rating may cause device failure. Operation at the absolute maximum ratings, for extended periods, may reduce device reliability. Unless otherwise stated voltages specified are relative to the ANODE pin.
3. T_J, max =150°C.
4. Ratings apply to ambient temperature at 25°C.

Recommended Operating Conditions

Symbol	Parameter	Min	Max	Unit
V_{KA}	Cathode Voltage	V_{REF}	36	V
I_{KA}	Cathode Current	0.065	100	mA
T_A	Operating Ambient Temperature	-40	125	°C

© Diodes Incorporated

ZXRE250/ZXRE252

VERY LOW CATHODE CURRENT ADJUSTABLE PRECISION SHUNT REGULATOR

Electrical Characteristics (T_A = +25°C, unless otherwise noted)

Symbol	Parameter	Test Conditions		Min	Typ.	Max	Unit
V_{REF}	Reference voltage	$V_{KA} = V_{REF}$, I_{KA} = 10mA	ZXRE250A	2.470	2.495	2.520	V
			ZXRE250B	2.482	2.495	2.507	V
V_{DEV}	Deviation of reference voltage over full temperature range (Note 5)	$V_{KA} = V_{REF}$, I_{KA} = 10mA	T_A = 0 to 70 °C		6	16	mV
			T_A = -40 to 85 °C		14	34	mV
			T_A = -40 to 125 °C		14	34	mV
$\frac{\Delta V_{REF}}{\Delta V_{KA}}$	Ratio of the change in reference voltage to the change in cathode voltage	I_{KA} = 10mA	V_{KA} = 10V to V_{REF}		-1.4	-2.7	mV/V
			V_{KA} = 36V to 10V		-1	-2	mV/V
I_{REF}	Reference input current	I_{KA} = 10mA, R1 = 10KΩ, R2 = ∞			1	4	µA
ΔI_{REF}	I_{REF} deviation over full temperature range (Note 5)	I_{KA} = 10mA, R1 = 10KΩ, R2 = ∞	T_A = 0 to 70 °C		0.8	1.2	µA
			T_A = -40 to 85 °C		0.8	2.5	µA
			T_A = -40 to 125 °C		0.8	2.5	µA
$I_{KA(MIN)}$	Minimum cathode current for regulation	$V_{KA} = V_{REF}$			40	65	µA
$I_{KA(OFF)}$	Off-state current	V_{KA} = 36V, V_{REF} = 0V			0.05	0.5	µA
$\lvert Z_{KA} \rvert$	Dynamic output impedance (Note 6)	$V_{KA} = V_{REF}$, f = 0Hz			0.2	0.5	Ω
θ_{JA}	Thermal Resistance Junction to Ambient	SOT23			380		°C/W
		SOT25			250		°C/W

Notes: 5. Deviation of V_{DEV}, and ΔI_{REF} are defined as the maximum variation of the values over the full temperature range.

The average temperature coefficient of the reference input voltage αV_{REF} is defined as:

$$\lvert \alpha V_{REF} \rvert = \frac{\left(\frac{V_{DEV}}{V_{REF} @ 25^{o}C} \right) X\ 10^{6}}{T2 - T1} \text{ ppm/}^{o}\text{C}$$

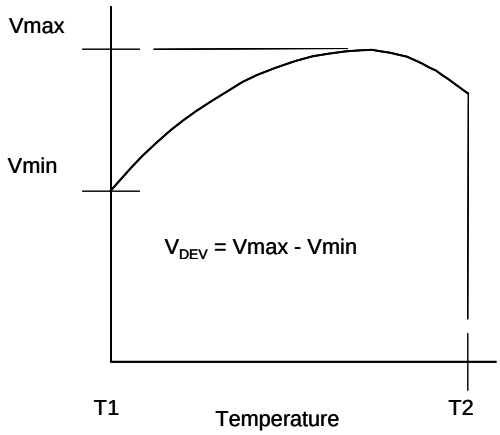

Where:
T2 – T1 = full temperature change.

αV_{REF} can be positive or negative depending on whether the slope is positive or negative.

Notes: 6. The dynamic output impedance, R_Z, is defined as:

$$\lvert Z_{KA} \rvert = \frac{\Delta V_{KA}}{\Delta I_{KA}}$$

When the device is programmed with two external resistors R1 and R2, the dynamic output impedance of the overall circuit, is defined as:

$$\lvert Z' \rvert = \frac{\Delta V}{\Delta I} \approx \lvert Z_{KA} \rvert \left(1 + \frac{R1}{R2} \right)$$

© Diodes Incorporated

NEW PRODUCT

Test Circuits

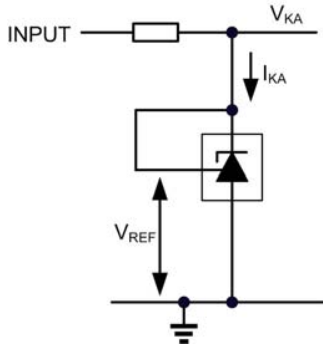

Figure 1. Test circuit for $V_{KA} = V_{REF}$

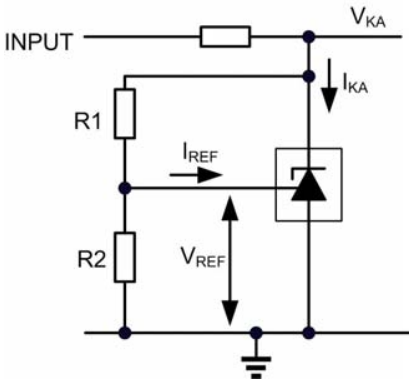

Figure 2. Test circuit for $V_{KA} > V_{REF}$

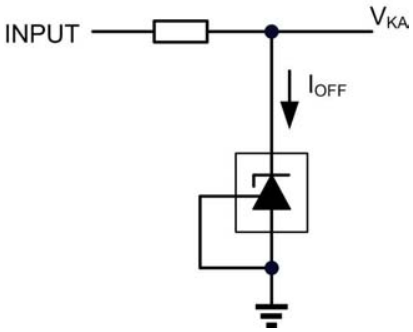

Figure 3. Test circuit for I_{OFF}

© Diodes Incorporated

NEW PRODUCT

Typical Performance Characteristics

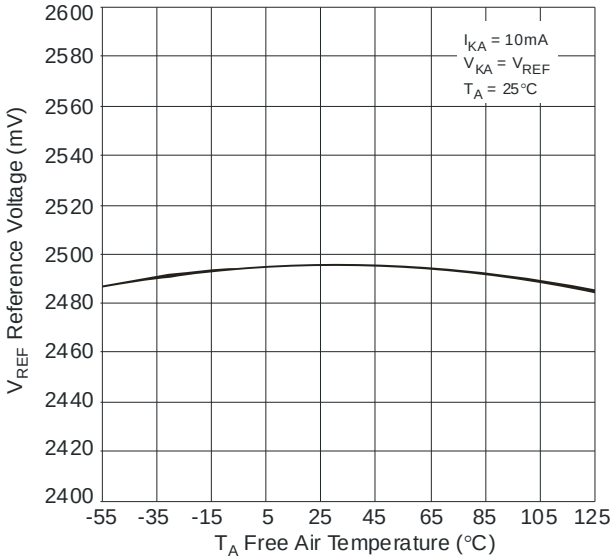

Reference Voltage vs. Free Air Temperature

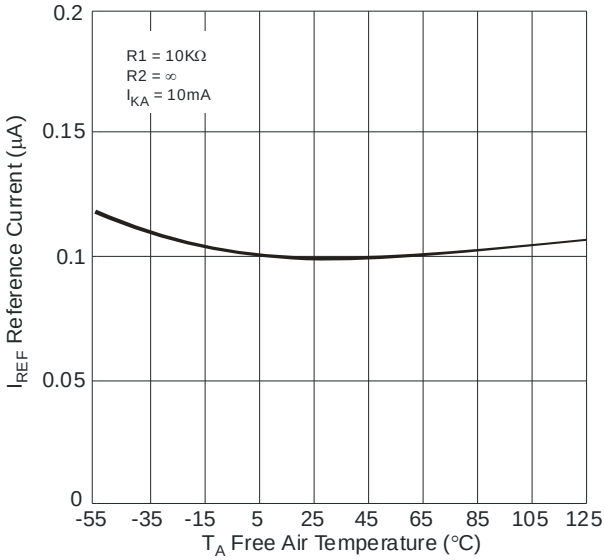

Reference Current vs. Free Air Temperature

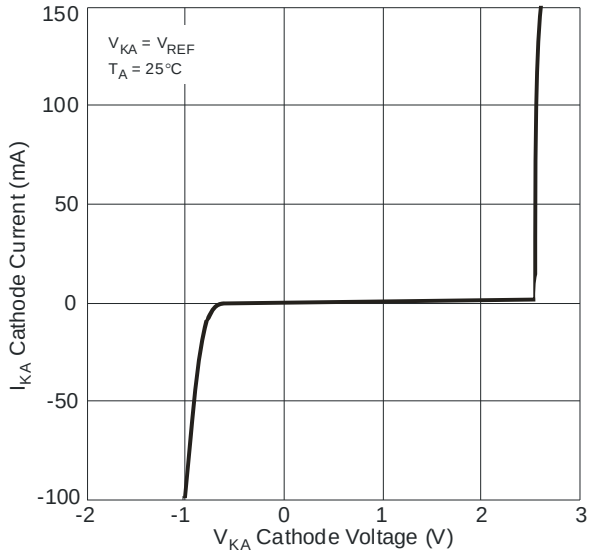

Cathode Current vs. Cathode Voltage

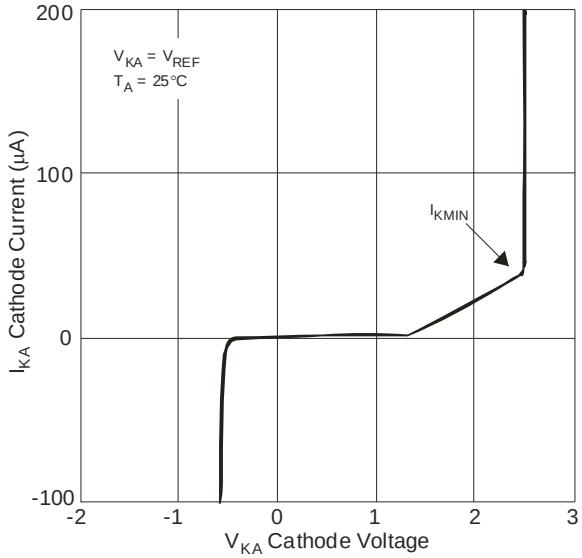

Cathode Current vs. Cathode Voltage

© Diodes Incorporated

ZXRE250/ZXRE252

VERY LOW CATHODE CURRENT ADJUSTABLE PRECISION SHUNT REGULATOR

Typical Performance Characteristics (cont.)

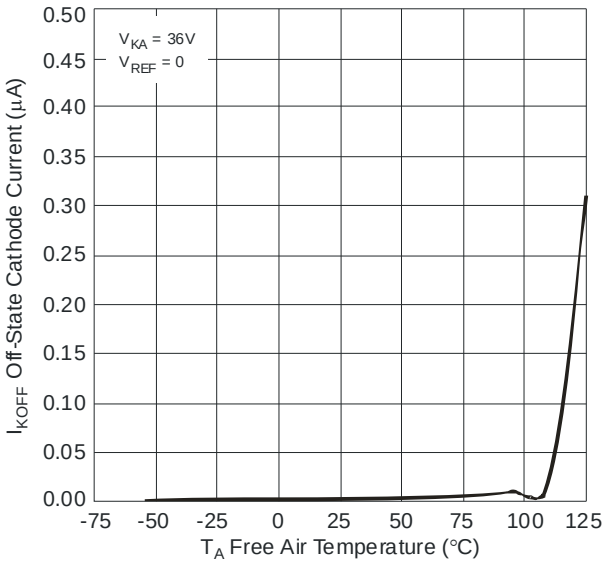

Off-State Cathode Current vs. Free Air Temperature

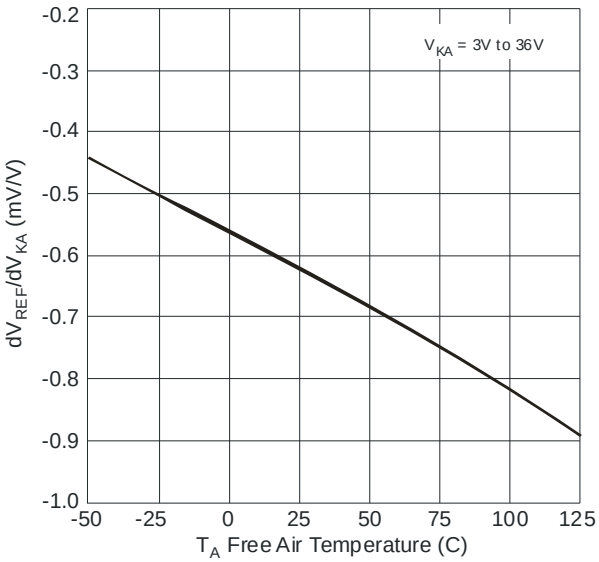

Ratio of Delta Reference Voltage to Delta Cathode Voltage vs. Free Air Temperature

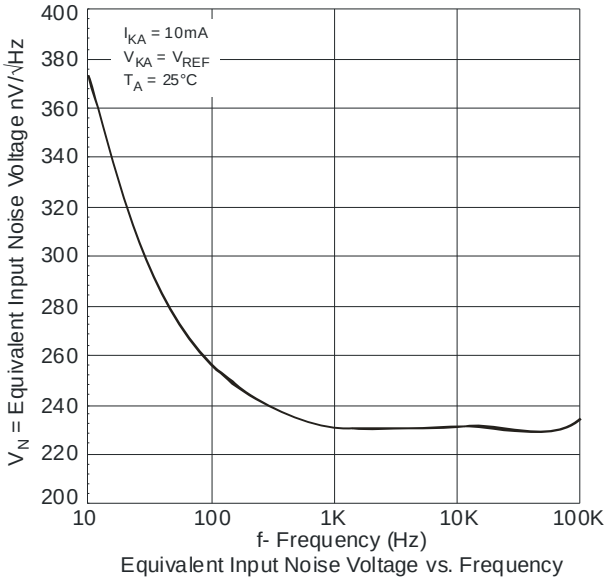

Equivalent Input Noise Voltage vs. Frequency

© Diodes Incorporated

NEW PRODUCT

Typical Performance Characteristics (cont.)

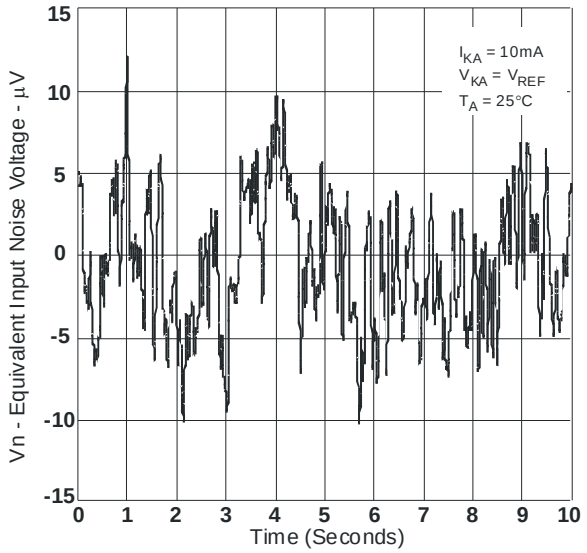

Equivalent Input Noise Voltage Over A 10-S Period

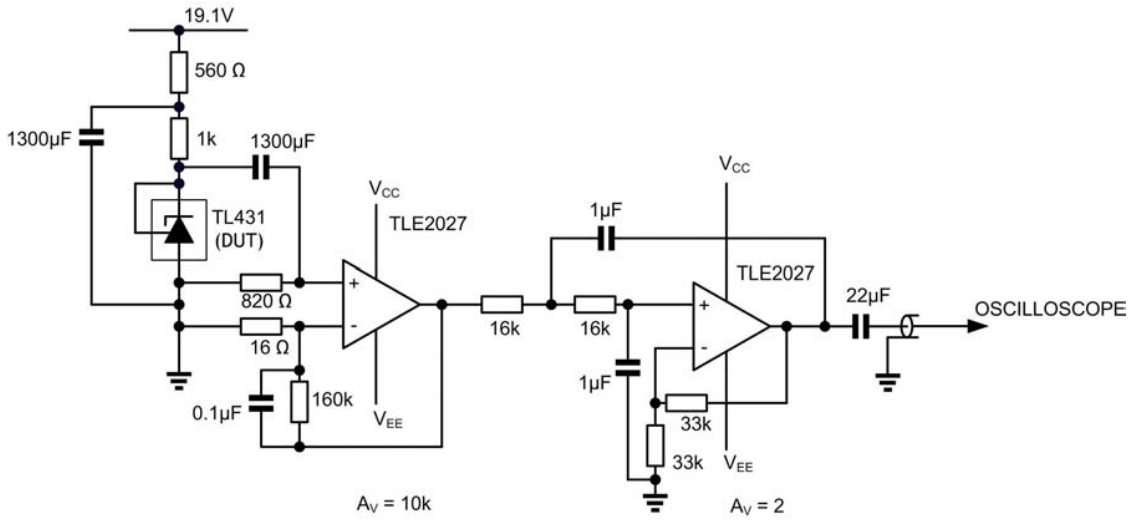

Figure 4. Test circuit for noise input voltage

© Diodes Incorporated

NEW PRODUCT

Typical Performance Characteristics (cont.)

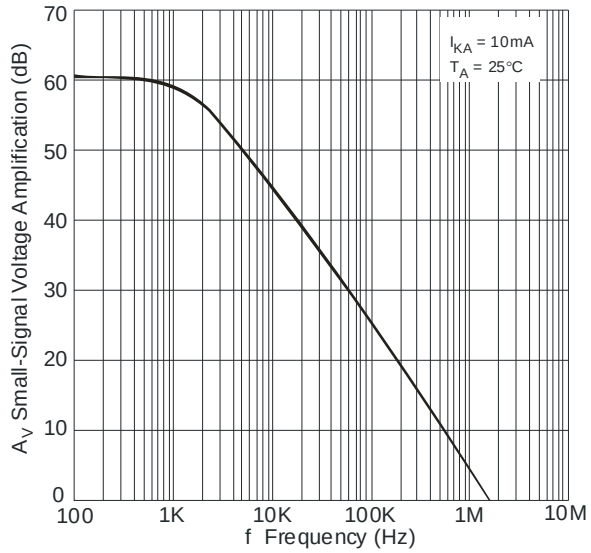

Small-Signal Voltage Amplification vs. Frequency

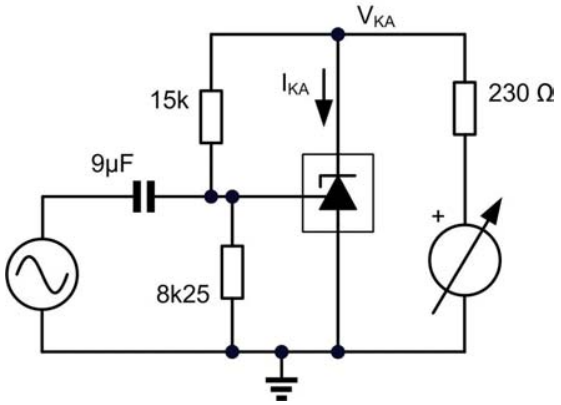

Test circuit for voltage amplification

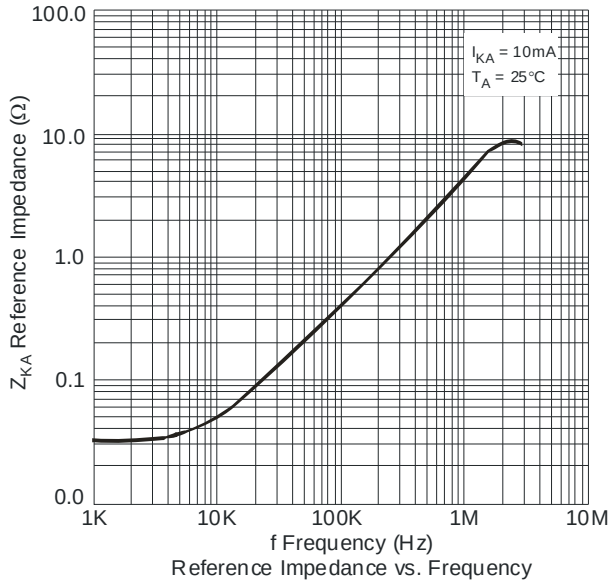

Reference Impedance vs. Frequency

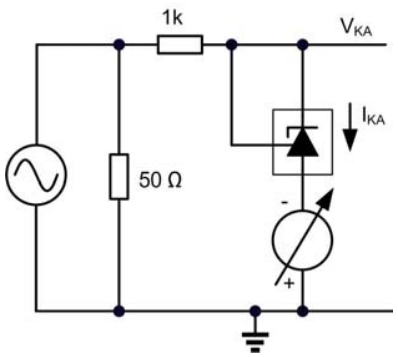

Test circuit for reference impedance

© Diodes Incorporated

ZXRE250/ZXRE252

VERY LOW CATHODE CURRENT ADJUSTABLE PRECISION SHUNT REGULATOR

Typical Performance Characteristics (cont.)

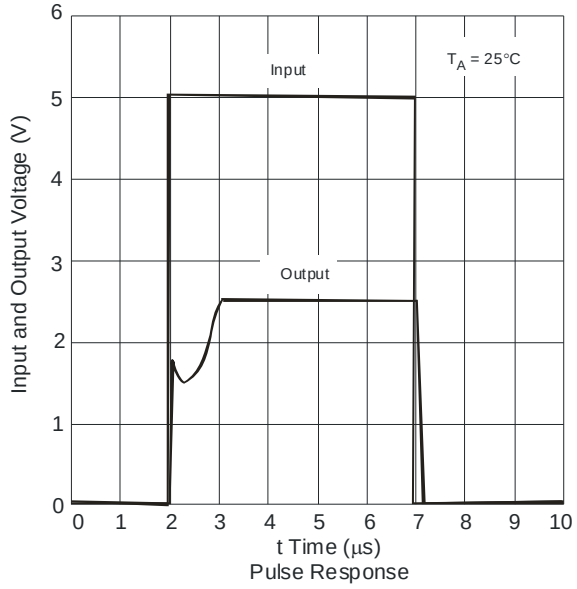

Pulse Response

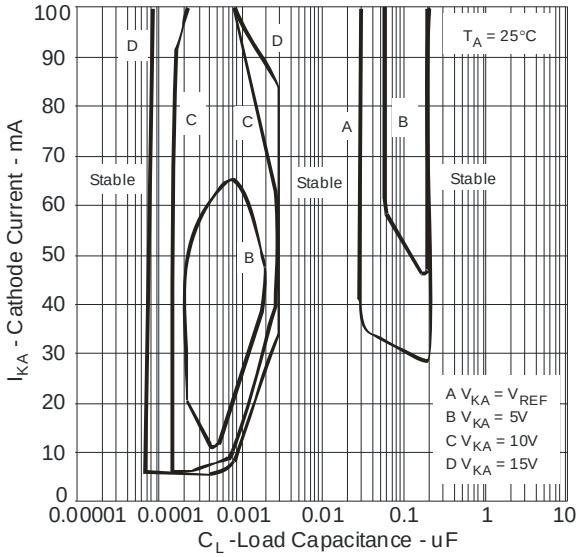

Stability Boundary Conditions

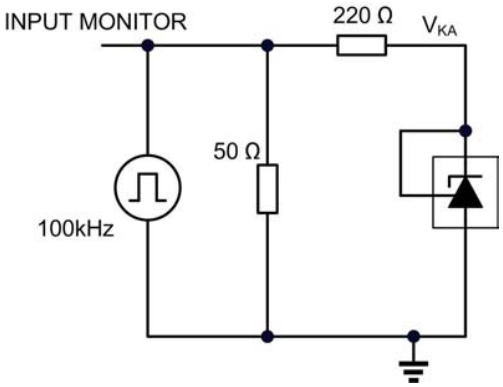

Test Circuit for Pulse Response

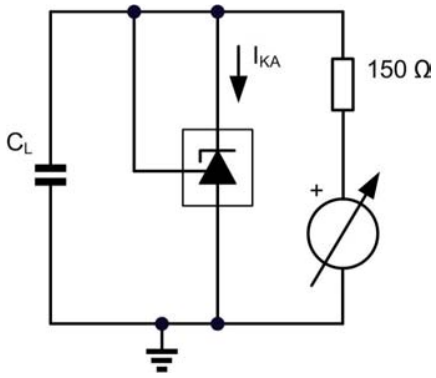

Test Circuit for Curve A

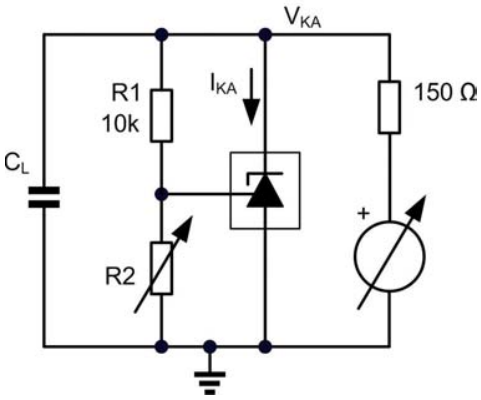

Test Circuit for Curves B, C, D

The device is stable under all conditions with a load capacitance not exceeding 50pF. The device is stable under all conditions with a load capacitance between 5nF and 20nF. The device is stable under all conditions with a load capacitance exceeding 300nF. With a cathode current not exceeding 5mA, the device is stable with any load capacitance.

© Diodes Incorporated

ZXRE250/ZXRE252

VERY LOW CATHODE CURRENT ADJUSTABLE PRECISION SHUNT REGULATOR

Applications Information

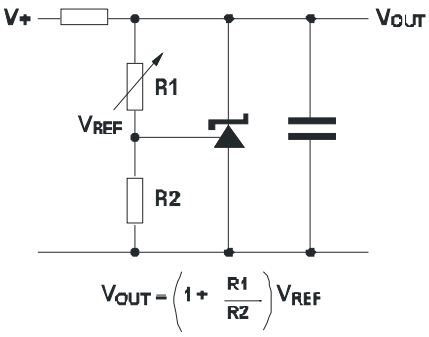

Shunt Regulator

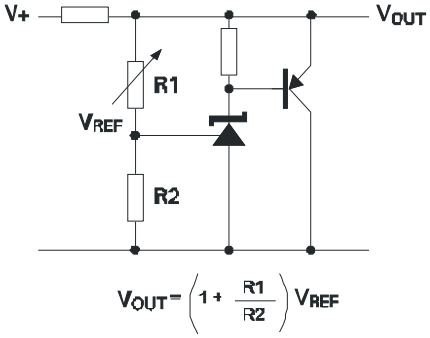

Higher Current Shunt Regulator

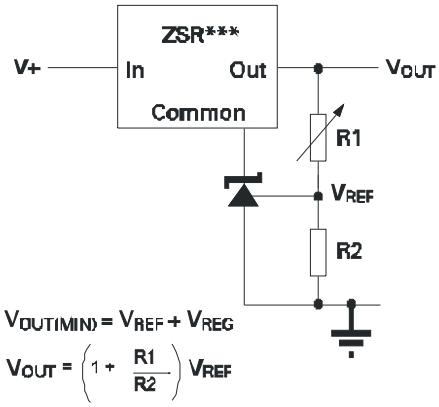

Output Control of a Three Terminal Fixed Regulator

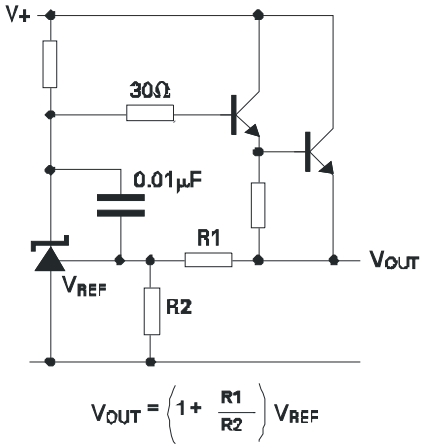

Series Regulator

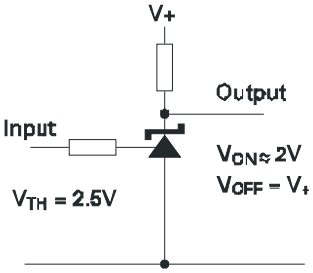

Single Supply Comparator with Temperature Compensated Threshold

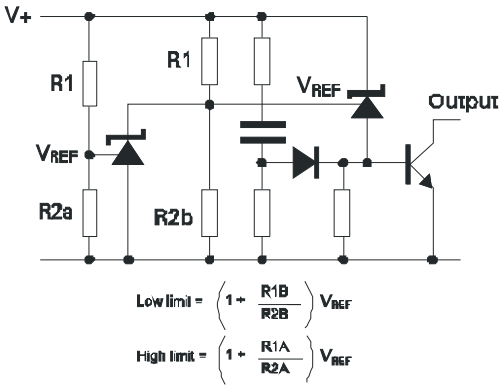

Over Voltage / Under Voltage Protection Circuit

© Diodes Incorporated

NEW PRODUCT

Ordering Information

ZXRE25 X X XX - 7

Pinout variation	Tolerance	Package	Packing
0: Standard pinout	A: ±1.0%	SA: SOT23	7: Tape & Reel
2: Reversed pinout in SOT23	B: ±0.5%	W5: SOT25	

Device (Note 7)	Package Code	Packaging (Note 5)	7" Tape and Reel		Ammo Box	
			Quantity	Part Number Suffix	Quantity	Part Number Suffix
ZXRE250A(B)SA-7	SA	SOT23	3000/Tape & Reel	-7	NA	NA
ZXRE250A(B)W5-7	W5	SOT25	3000/Tape & Reel	-7	NA	NA
ZXRE252A(B)SA-7	SA	SOT23	3000/Tape & Reel	-7	NA	NA

Notes: 7. Pad layout as shown on Diodes Inc. suggested pad layout document AP02001, which can be found on our website at http://www.diodes.com/datasheets/ap02001.pdf.
8. Suffix (B) denotes ZXRE250B (0.5% tolerance) device.

© Diodes Incorporated

NEW PRODUCT

Marking Information

(1) SOT23

(Top View)

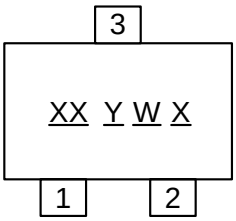

XX : Identification code
Y : Year 0~9
W : Week : A~Z : 1~26 week;
a~z : 27~52 week; z represents
52 and 53 week
X : A~Z : Green

Device	Package	Identification Code
ZXRE250ASA	SOT23	DA
ZXRE250BSA	SOT23	DB
ZXRE252ASA	SOT23	FA
ZXRE252BSA	SOT23	FB

(2) SOT25

(Top View)

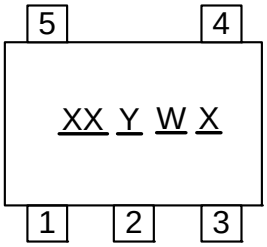

XX : Identification code
Y : Year 0~9
W : Week : A~Z : 1~26 week;
a~z : 27~52 week; z represents
52 and 53 week
X : A~Z : Green

Device	Package	Identification Code
ZXRE250AW5	SOT25	DA
ZXRE250BW5	SOT25	DB

© Diodes Incorporated

NEW PRODUCT

ZXRE250/ZXRE252

VERY LOW CATHODE CURRENT ADJUSTABLE PRECISION SHUNT REGULATOR

Package Outline Dimensions (All Dimensions in mm)

(1) Package type: SOT25

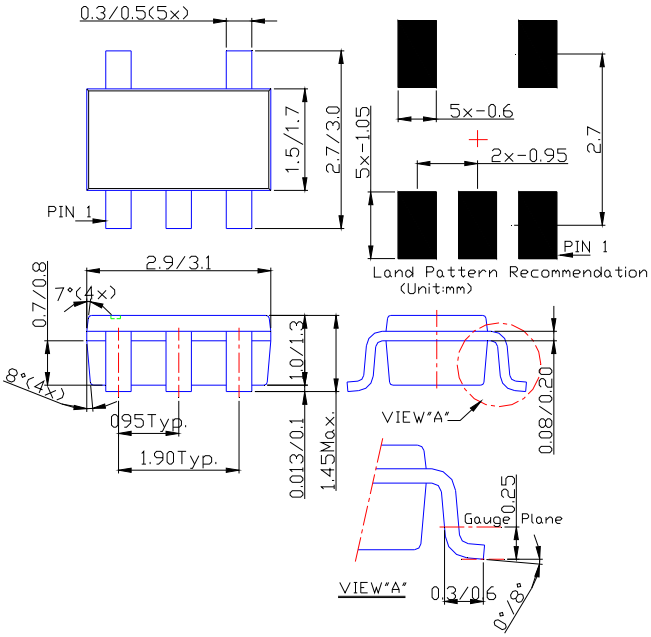

(2) Package Types: SOT23

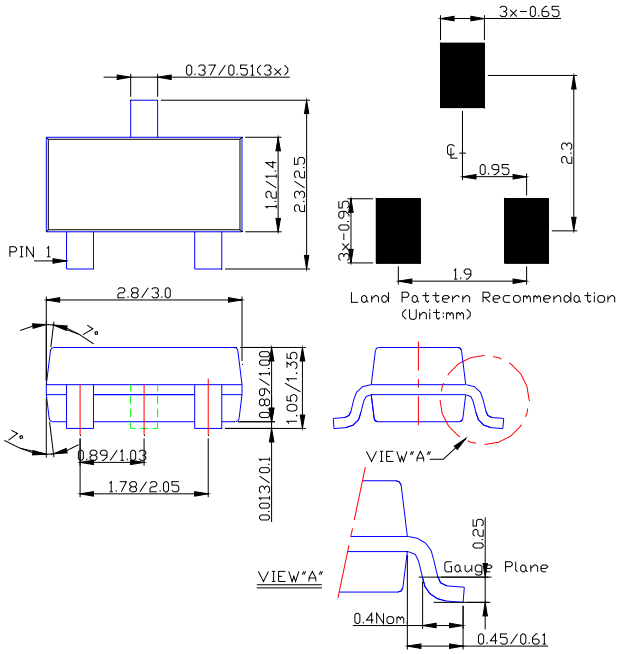

© Diodes Incorporated

NEW PRODUCT

IMPORTANT NOTICE

DIODES INCORPORATED MAKES NO WARRANTY OF ANY KIND, EXPRESS OR IMPLIED, WITH REGARDS TO THIS DOCUMENT, INCLUDING, BUT NOT LIMITED TO, THE IMPLIED WARRANTIES OF MERCHANTABILITY AND FITNESS FOR A PARTICULAR PURPOSE (AND THEIR EQUIVALENTS UNDER THE LAWS OF ANY JURISDICTION).

Diodes Incorporated and its subsidiaries reserve the right to make modifications, enhancements, improvements, corrections or other changes without further notice to this document and any product described herein. Diodes Incorporated does not assume any liability arising out of the application or use of this document or any product described herein; neither does Diodes Incorporated convey any license under its patent or trademark rights, nor the rights of others. Any Customer or user of this document or products described herein in such applications shall assume all risks of such use and will agree to hold Diodes Incorporated and all the companies whose products are represented on Diodes Incorporated website, harmless against all damages.

Diodes Incorporated does not warrant or accept any liability whatsoever in respect of any products purchased through unauthorized sales channel.
Should Customers purchase or use Diodes Incorporated products for any unintended or unauthorized application, Customers shall indemnify and hold Diodes Incorporated and its representatives harmless against all claims, damages, expenses, and attorney fees arising out of, directly or indirectly, any claim of personal injury or death associated with such unintended or unauthorized application.

Products described herein may be covered by one or more United States, international or foreign patents pending. Product names and markings noted herein may also be covered by one or more United States, international or foreign trademarks.

LIFE SUPPORT

Diodes Incorporated products are specifically not authorized for use as critical components in life support devices or systems without the express written approval of the Chief Executive Officer of Diodes Incorporated. As used herein:

A. Life support devices or systems are devices or systems which:

1. are intended to implant into the body, or
2. support or sustain life and whose failure to perform when properly used in accordance with instructions for use provided in the labeling can be reasonably expected to result in significant injury to the user.

B. A critical component is any component in a life support device or system whose failure to perform can be reasonably expected to cause the failure of the life support device or to affect its safety or effectiveness.

Customers represent that they have all necessary expertise in the safety and regulatory ramifications of their life support devices or systems, and acknowledge and agree that they are solely responsible for all legal, regulatory and safety-related requirements concerning their products and any use of Diodes Incorporated products in such safety-critical, life support devices or systems, notwithstanding any devices- or systems-related information or support that may be provided by Diodes Incorporated. Further, Customers must fully indemnify Diodes Incorporated and its representatives against any damages arising out of the use of Diodes Incorporated products in such safety-critical, life support devices or systems.

Copyright © 2011, Diodes Incorporated

www.diodes.com