Excellent Integrated System Limited

Stocking Distributor

Click to view price, real time Inventory, Delivery & Lifecycle Information:

FCI
HM2P66PK511CGF

For any questions, you can email us directly:
sales@integrated-circuit.com

LOADING PATTERN MATING SIDE

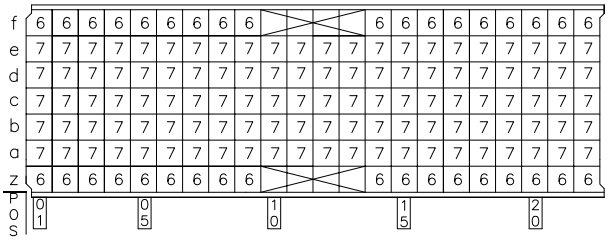

LOADED CONNECTOR ASSEMBLY
(FOR EXAMPLE)

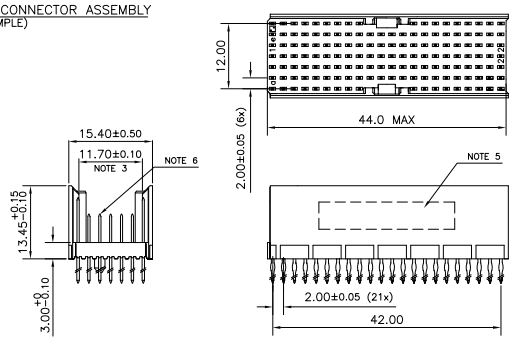

CONTACT OVERVIEW

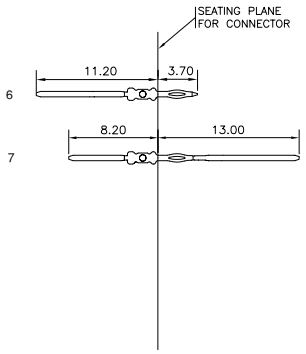

LAY-OUT P.C.B.-HOLE

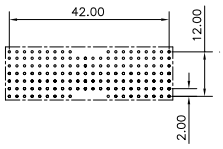

HM2P66PK511C--□

LEAD FREE INDICATOR : LF = LEAD FREE
(DIGIT 15 & 16)

PLATING CODE (DIGIT 13 AND 14)
(REF DRW NO. BS,C , 201844 , 003)

NOTES

1. THIS PRODUCT IS CSA APPROVED.
2. THIS PRODUCT IS UL RECOGNIZED.
3. MEASURED AT THE BOTTOM.
4. MATERIAL CONTACT: PHOSPHORBRONZE
   HOUSING: CREAM WHITE GLASS FILLED POLYESTER UL-94V0
5. CONNECTOR PRINTED WITH P/N AND DATE CODE.
6. FOR ACTUAL CONTACT LOADINGS, SEE LOADING PATTERN MATING SIDE.
7. SHAPE OF CONNECTOR HOUSING CAN ALTER DEPENDING ON PRODUCTION LOCATION
8. THE PRODUCT (LF) MEETS EUROPEAN UNION DIRECTIVES AND OTHER COUNTRY REGULATIONS AS DESCRIBED IN GS-22-008
9. FOR RECOMMENDED PTH DIMENSIONS REFER DRAWING : BS, A , 201572 , 001

CATALOG NO: HM2P66PK511C----

mat'l. code SEE NOTE 4				surface ISO 1302	tolerance ISO 406 ISO 1101	projection	product family MILLIPACS
ltr	ecn no	dr	date	tolerances unless otherwise specified			title
A	I04-0130	MINI	2004/12/28	angles	linear .0±0.2	MM	MPACS 5+2R STR HDR PF CONN TYPE AB 22 POS.
B	I05-0195	MINI	2005/10/19		.00±0.1		
C	I06-0090	MINI	2006/06/30	0°±1°		scale –	
				dr	MINI K VANDANATH	2004/12/28	dwg no BS, C ,203028, 196 — sheet 1 of 1 — size A3
				engr	BIJU K PAUL	2004/12/28	
				chr	BIJU K PAUL	2006/06/30	
				appd	BIJU K PAUL	2006/06/30	type Product Customer Drawing
sheet index	revision sheet	C 1					

form: A3

FCIconnect.com
Copyright FCI