Excellent Integrated System Limited

Stocking Distributor

Click to view price, real time Inventory, Delivery & Lifecycle Information:

FCI
HM2P87PDE120N9

For any questions, you can email us directly:
sales@integrated-circuit.com

Distributor of FCI: Excellent Integrated System Limited
Datasheet of HM2P87PDE120N9 - MPAC 8R ST PF HDR
Contact us: sales@integrated-circuit.com Website: www.integrated-circuit.com

BS,C ,202175,055 C

GEN. ST.	01	02	03	04	05	06	07	08	0D	50	60	70	80	90
INT. ST.	10 11 12 13 14 18 20 31 32 33 34 38 39 40 42 43 44 45 46 48 56 70 72 73 75 76 81 82 83 84 88													

REV.	DATE	DESCRIPTION	BY	C'K'D'
A	2001-09-04	CONVERSION REVISION 01	KN	
B	2005-11-08	105-0219	VIVEK	BKP
C	2006-08-04	106-0120	VIVEK	BKP

LOADING PATTERN MATING SIDE

	01	02	03	04	05	06	07	08	09	10	11	12	13	14	15	16	17	18	19	20	21	22	23	24	25
y	0	0	0	0	0	0	0	0	0	0				0	0	0	0	0	0	0	0	0	0	0	0
h	5	5	5	5	5	5	5	5	5	5				5	5	5	5	5	5	5	5	5	5	5	5
g	5	5	5	5	5	5	5	5	5	5				5	5	5	5	5	5	5	5	5	5	5	5
f	5	5	5	5	5	5	5	5	5	5				5	5	5	5	5	5	5	5	5	5	5	5
e	5	5	5	5	5	5	5	5	5	5				5	5	5	5	5	5	5	5	5	5	5	5
d	5	5	5	5	5	5	5	5	5	5				5	5	5	5	5	5	5	5	5	5	5	5
c	5	5	5	5	5	5	5	5	5	5				5	5	5	5	5	5	5	5	5	5	5	5
b	5	5	5	5	5	5	5	5	5	5				5	5	5	5	5	5	5	5	5	5	5	5
a	5	5	5	5	5	5	5	5	5	5				5	5	5	5	5	5	5	5	5	5	5	5
z	0	0	0	0	0	0	0	0	0	0				0	0	0	0	0	0	0	0	0	0	0	0
POS	01		05			10				15					20					25						

SHEET NR. : 55

LOADED CONNECTOR ASSEMBLY

(FOR EXAMPLE)

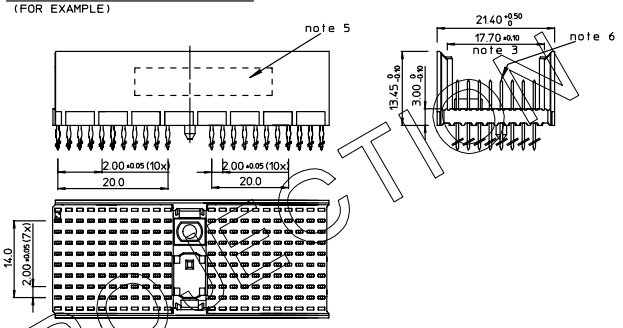

CONTACT OVERVIEW

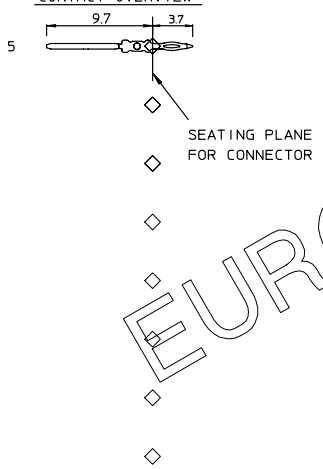

LAY-OUT P.C.B.-HOLE

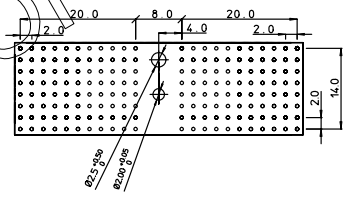

HM2P87PDE120--- --

LEAD FREE INDICATOR : LF = LEAD FREE
(DIGIT 15 & 16)

PLATING CODE (DIGIT 13 AND 14)
(REF DWG No. BS,C ,201844,003)

NOTES:

1. THIS PRODUCT IS CSA APPROVED.
2. THIS PRODUCT IS UL RECOGNIZED.
3. MEASURED AT THE BOTTOM.
4. MATERIAL CONTACT: PHOSPHORBRONZE
   HOUSING: CREAM WHITE GLASSFILLED POLYESTER UL-94V0
5. CONNECTOR PRINTED WITH P/N AND DATE CODE.
6. FOR ACTUAL CONTACT LOADINGS, SEE LOADING PATTERN MATING SIDE.
7. SHAPE OF CONNECTOR HOUSING CAN ALTER DEPENDING ON PRODUCTION LOCATION.
8. THE PRODUCT (LF) MEETS EUROPEAN UNION DIRECTIVES AND OTHER COUNTRY REGULATIONS AS DESCRIBED IN GS-22-008
9. FOR RECOMMENDED PTH DIMENSIONS REFER DRAWING : BS,A ,201572,001

1DEC ±0,2
2DEC ±0,1
ANGLES ±1°

WE RESERVE THE RIGHT TO CHANGE DIMENSIONS OR REQUIREMENTS WITHOUT PRIOR NOTICE.

ALL DIMENSIONS IN MM

	APPR.	DATE	SIGN.
DRAFT		1998-03-26	M.Fret
CHECKED			
PROD. MGR.			
PR.ENG.MGR			
PR.MGT.MGR			

REFERENCES

LOADING PATTERN OVERVIEW (8+2 ROW)

CAT. No. HM2P87PDE120----

FCI www.fciconnect.com

SCALE

BS,C ,202175,055 — DRAWING No. — CUSTOMER DRAWING

C — REVISION

THIS IS OUR EXCLUSIVE PROPERTY. IT IS NOT TO BE COPIED, REPRINTED OR DISCLOSED TO A THIRD PARTY, NOR USED FOR MANUFACTURING WITHOUT OUR WRITTEN CONSENT, AND HAS TO BE RETURNED TO US IN CASE OF NO USAGE

DIT IS ONZE EIGENDOM EN MAG NOCH NAGEMAAKT, HERDRUKT, OVERGEMAAKT AAN DERDEN, NOCH VOOR FABRIKATIE GEBRUIKT WORDEN, ZONDER ONZE SCHRIFTELIJKE TOELATING. BIJ NIET GEBRUIK IS TERUGZENDING VERPLICHT.

EUROPEAN PROJECTION

PDM: Rev:C STATUS: Released Printed: Dec 02, 2007