Excellent Integrated System Limited

Stocking Distributor

Click to view price, real time Inventory, Delivery & Lifecycle Information:

Harting
09330164636

For any questions, you can email us directly:
sales@integrated-circuit.com

Distributor of Harting: Excellent Integrated System Limited
Datasheet of 09330164636 - INSERT MALE 16P+1GND TERM BLOCK
Contact us: sales@integrated-circuit.com Website: www.integrated-circuit.com

Alle Rechte vorbehalten/ *All rights reserved*

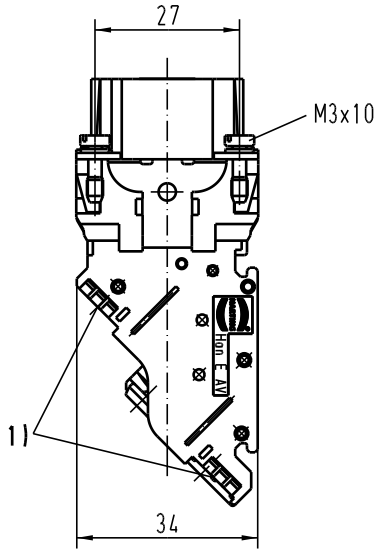

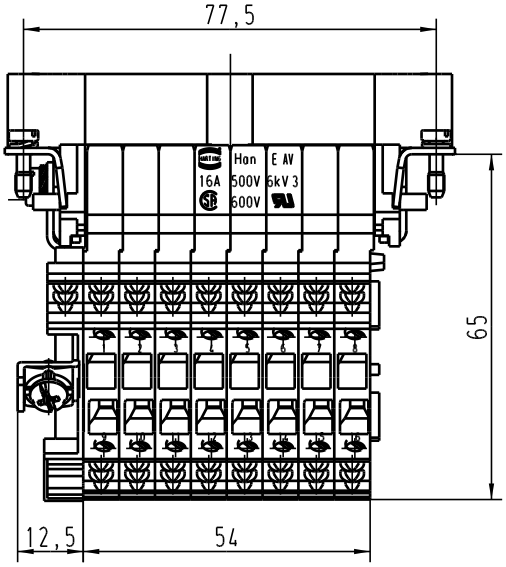

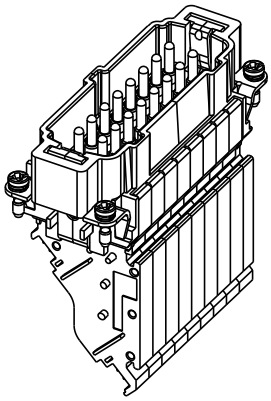

1) Aufnahme für Bezeichnungsschilder (max. 6-stellig)
slots for designation strips (max. 6 digits)

All Dimensions in mm Original Size DIN A 4			Techn. Character.			Nicht tolerierte Masse/ *Free size tolerances*
				Dat.	Name	Massstab/ *Scale*
			Detail.	17.03.93	WILD.	1:1
			Insp.		HERB.	
			Stand.			
410278	05.01.05	DY	HARTING Electric GmbH & Co. KG D-32339 Espelkamp			TB 09 33 016 4636
Mod.	Dat.	Name				Sub.

HAN 16 E-AV-M-SK
Anschlussverteiler rechts
terminal block connector right

Blatt/ *page* /