Excellent Integrated System Limited

Stocking Distributor

Click to view price, real time Inventory, Delivery & Lifecycle Information:

Harting
09150033101

For any questions, you can email us directly:
sales@integrated-circuit.com

Alle Rechte vorbehalten/ *All rights reserved*

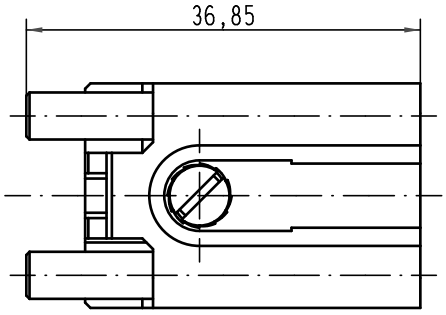

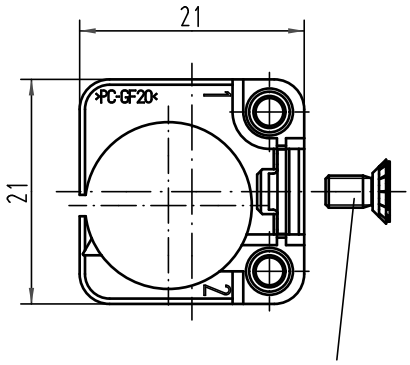

Befestigungsschraube
lose beigelegt
insert fixing screw
is enclosed

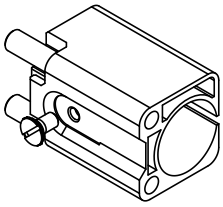

			Techn. Character.			Nicht tolerierte Maße/ *Free size tolerances*
				Dat.	Name	Maßstab/ *Scale*
			Detail.	13.01.11	Spr	2:1
			Insp.		Sch	
			Stand.			
			HARTING Electric GmbH & Co. KG D-32339 Espelkamp			Han 3 Quintax-F-c Buchseneinsatz *female insert*
A						TB 09 15 003 3101
Mod.	Dat.	Name				Sub. TB 09 15 003 3101 v. 16.09.03

All Dimensions in mm
Original Size DIN A 4

Blatt/ *page* /