Excellent Integrated System Limited

Stocking Distributor

Click to view price, real time Inventory, Delivery & Lifecycle Information:

Harting
09185605916

For any questions, you can email us directly:
sales@integrated-circuit.com

Distributor of Harting: Excellent Integrated System Limited
Datasheet of 09185605916 - CONN HEADER 60POS T/H R/A GOLD
Contact us: sales@integrated-circuit.com Website: www.integrated-circuit.com

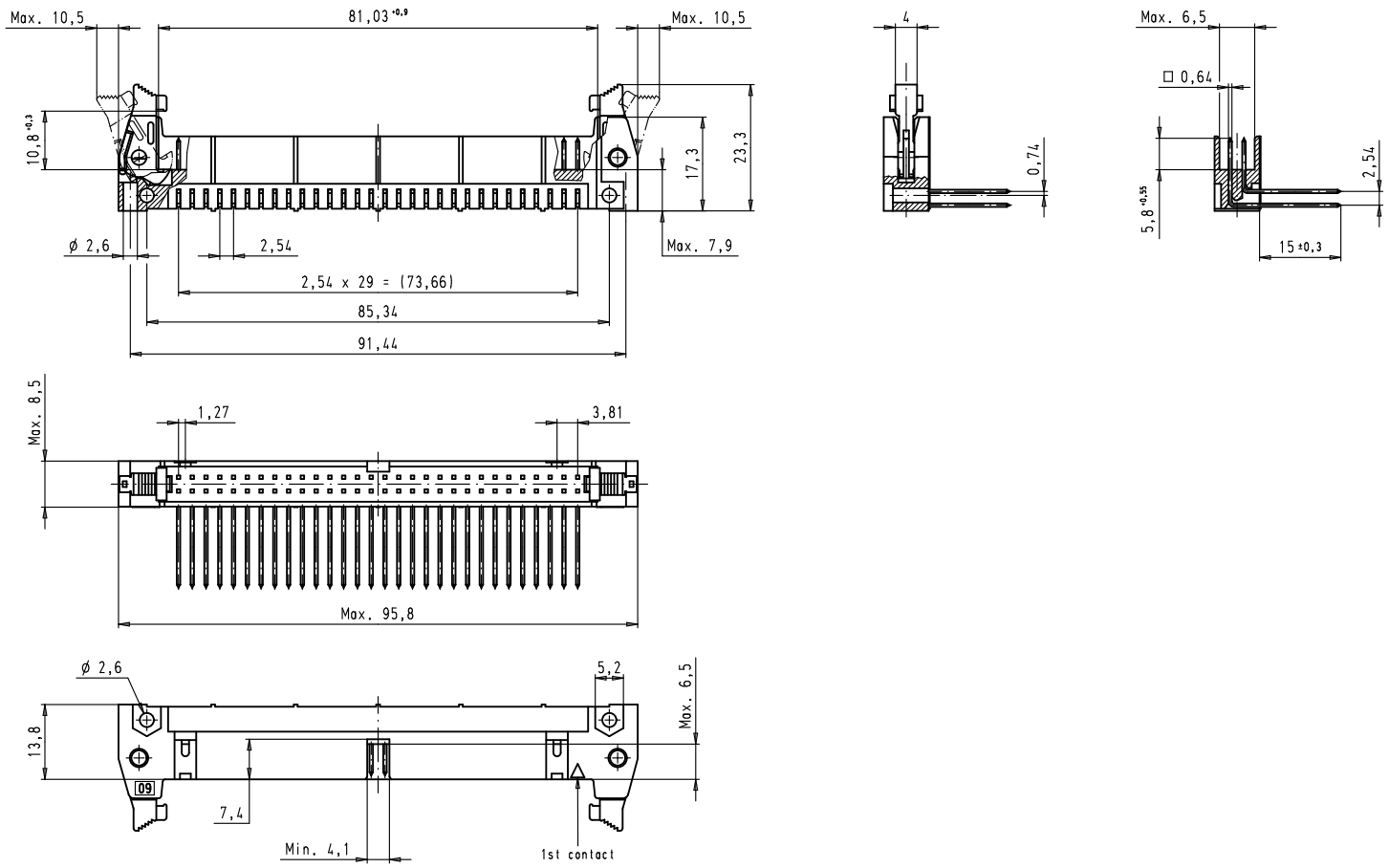

Part number	Performance level
09 18 560 7916	3
09 18 560 6916	2
09 18 560 5916	0,76 µm Au

Mod.	Dat.	Name
34890	13/06/08	PK
31092	19/09/02	CV

	Dat.	Name
Detail.	19/09/02	CV
Insp.		
Stand.		

All Dim. in mm
Orig. Size DIN A 3

HARTING EURL
F-95972 Paris

SEK 18 Male Connector Standard
60 poles
Angled wrap posts
Short locking levers

Maßstab/Scale: 1,5:1

TB 09 18 560 X916

Sub.

Blatt/Page: 1/1

Alle Rechte vorbehalten/ All rights reserved