Excellent Integrated System Limited

Stocking Distributor

Click to view price, real time Inventory, Delivery & Lifecycle Information:

Delta Electronics
QFR0824SH-DT50

For any questions, you can email us directly:
sales@integrated-circuit.com

SPECIFICATION FOR APPROVAL

Customer.
Description. DC FAN
Part No. REV.
Delta Model No. QFR0824SH-DT50 REV. 00
Sample Issue No.
Sample Issue Date. JUN-22-2013

PLEASE SEND ONE COPY OF THIS SPECIFICATION BACK AFTER YOU SIGNED APPROVAL FOR PRODUCTION PRE-ARRANGEMENT.

APPROVED BY :

DATE:

Delta Electronics, Inc.
HeTianXia High-Tech Industrial Park.
Shi Jie Town, Dong Guan City.
Guangdong Province, China. P. R. C.
TEL : 86-769-86329008
FAX : 86-769-86631589

Delta Electronics, Inc.
HeTianXia High-Tech Industrial Park.
Shi Jie Town, Dong Guan City.
Guangdong Province, China. P. R. C.

TEL : 86-769-86329008
FAX : 86-769-86631589

STATEMENT OF DEVIATION

****

- [x] NONE
- [ ] DESCRIPTION :

Delta Electronics, Inc.
HeTianXia High-Tech Industrial Park.
Shi Jie Town, Dong Guan City.
Guangdong Province, China. P. R. C.

TEL : 86-769-86329008
FAX : 86-769-86631589

SPECIFICATION FOR APPROVAL

****

Customer:

Description: DC FAN

Customer P/N: REV:

Delta Model NO.: QFR0824SH-DT50 Safety Delta Model NO.: QFR0824SH

Sample Rev: 00 Issue NO:

Sample Issue Date: JUN-22-2013 Quantity:

1. SCOPE:

THIS SPECIFICATION DEFINES THE ELECTRICAL AND MECHANICAL CHARACTERISTICS OF THE DC BRUSHLESS AXIAL FLOW FAN. THE FAN MOTOR IS WITH SIGNLE PHASE AND FOUR POLES.

2. CHARACTERS:

ITEM	DESCRIPTION
RATED VOLTAGE	24 VDC
OPERATION VOLTAGE	14 - 27.6 VDC
INPUT CURRENT	0.17 (0.26 MAX.) A (SAFETY CURRENT 0.26A)
INPUT POWER	4.08 (6.24 MAX.) W
SPEED	4300R.P.M.±10%
MAX. AIR FLOW (AT ZERO STATIC PRESSURE)	1.545(MIN. 1.390) M^3/MIN. 54.57 (MIN. 49.11) CFM
MAX.AIR PRESSURE (AT ZERO AIR FLOW)	8.400 (MIN. 6.804) mmH_2O 0.331 (MIN. 0.268) $inchH_2O$
ACOUSTICAL NOISE (AVG.)	41.2 (MAX. 45.2) dB-A
INSULATION TYPE	UL: CLASS A

(continued)

PART NO:

DELTA MODEL: QFR0824SH-DT50

INSULATION STRENGTH	10 MEG OHM MIN. AT 500 VDC (BETWEEN FRAME AND (+) TERMINAL)
DIELECTRIC STRENGTH	5 mA MAX. AT 500 VAC 50/60 Hz ONE MINUTE, (BETWEEN FRAME AND (+) TERMINAL)
EXTERNAL COVER	OPEN TYPE
LIFE EXPECTANCE (AT LABEL VOLTAGE)	50,000 HOURS CONTINOUS OPERATION AT 40 °C WITH 15 ~ 65 %RH.
ROTATION	CLOCKWISE VIEW FROM NAME PLATE SIDE
OVER CURRENT SHUT DOWN	THE CURRENT WILL SHUT DOWN, WHEN LOCKING ROTOR.
LEAD WIRE	UL 1061 -F- AWG #24 BLACK WIRE NEGATIVE(-) RED WIRE POSITIVE(+) BLUE WIRE FREQUENCY(-F00)

NOTES:
1. ALL READINGS ARE MEASURED AFTER STABLY WARMING UP THROUGH 10 MINUTES
2. STANDARD AIR PROPERTY IS AIR AT (Td) 25°C TEMPERATURE, (RH) 65% RELATIVE HUMIDITY, AND (Pb) 760 mmHg BAROMETRIC PRESSURE.
3. THE VALUES WRITTEN IN PARENS , ( ), ARE LIMITED SPEC.
4. ACOUSTICAL NOISE MEASURING CONDITION:

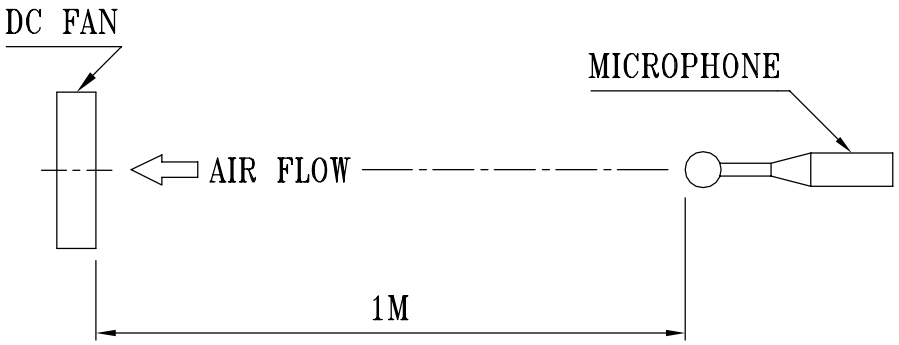

NOISE IS MEASURED AT RATED VOLTAGE IN FREE AIR IN ANECHOIC CHAMBER WITH B & K SOUND LEVEL METER WITH MICROPHONE AT A DISTANCE OF ONE METER FROM THE FAN INTAKE.

PART NO:

DELTA MODEL: QFR0824SH-DT50

---

3. MECHANICAL:

3-1. DIMENSIONS ---------- SEE DIMENSIONS DRAWING

3-2. FRAME ---------- PLASTIC UL: 94V-0

3-3. IMPELLER ---------- PLASTIC UL: 94V-0

3-4. BEARING SYSTEM ---------- TWO BALL BEARINGS

3-5. WEIGHT ---------- 88 GRAMS

4. ENVIRONMENTAL:

4-1. OPERATING TEMPERATURE ---------- -10 TO +70 DEGREE C

4-2. STORAGE TEMPERATURE ---------- -40 TO +75 DEGREE C

4-3. OPERATING HUMIDITY ---------- 5 TO 90 % RH

4-4. STORAGE HUMIDITY ---------- 5 TO 95 % RH

5. PROTECTION:

5-1. LOCKED ROTOR PROTECTION

IMPEDANCE OF MOTOR WINDING PROTECTS MOTOR FROM FIRE IN 96 HOURS OF LOCKED ROTOR CONDITION AT THE RATED VOLTAGE.

5-2. POLARITY PROTECTION

BE CAPABLE OF WITHSTANDING IF REVERSE CONNECTION FOR POSITIVE AND NEGATIVE LEADS.

6. RE OZONE DEPLETING SUBSTANCES:

6-1. NO CONTAINING PBBs, PBBOs, CFCs, PBBEs, PBDPEs AND HCFCs.

7. PRODUCTION LOCATION

7-1. PRODUCTS WILL BE PRODUCED IN CHINA OR THAILAND .

PART NO:

DELTA MODEL: QFR0824SH-DT50

8. P & Q CURVE:

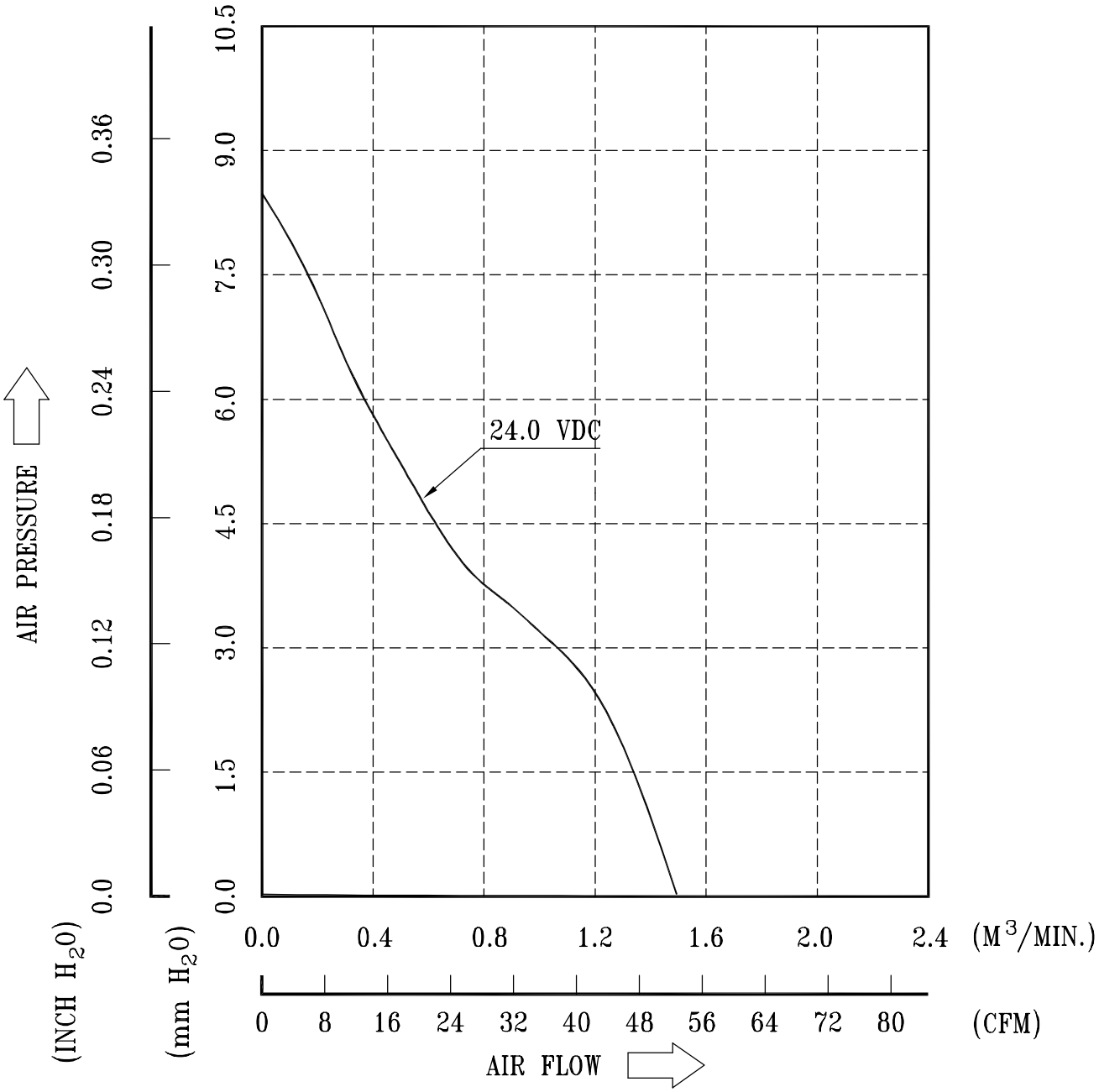

* TEST CONDITION: INPUT VOLTAGE ----- OPERATION VOLTAGE
TEMPERATURE ------ ROOM TEMPERATURE
HUMIDITY ---------- 65%RH

PART NO:

DELTA MODEL: QFR0824SH-DT50

9. DIMENSIONS DRAWING

LABEL:

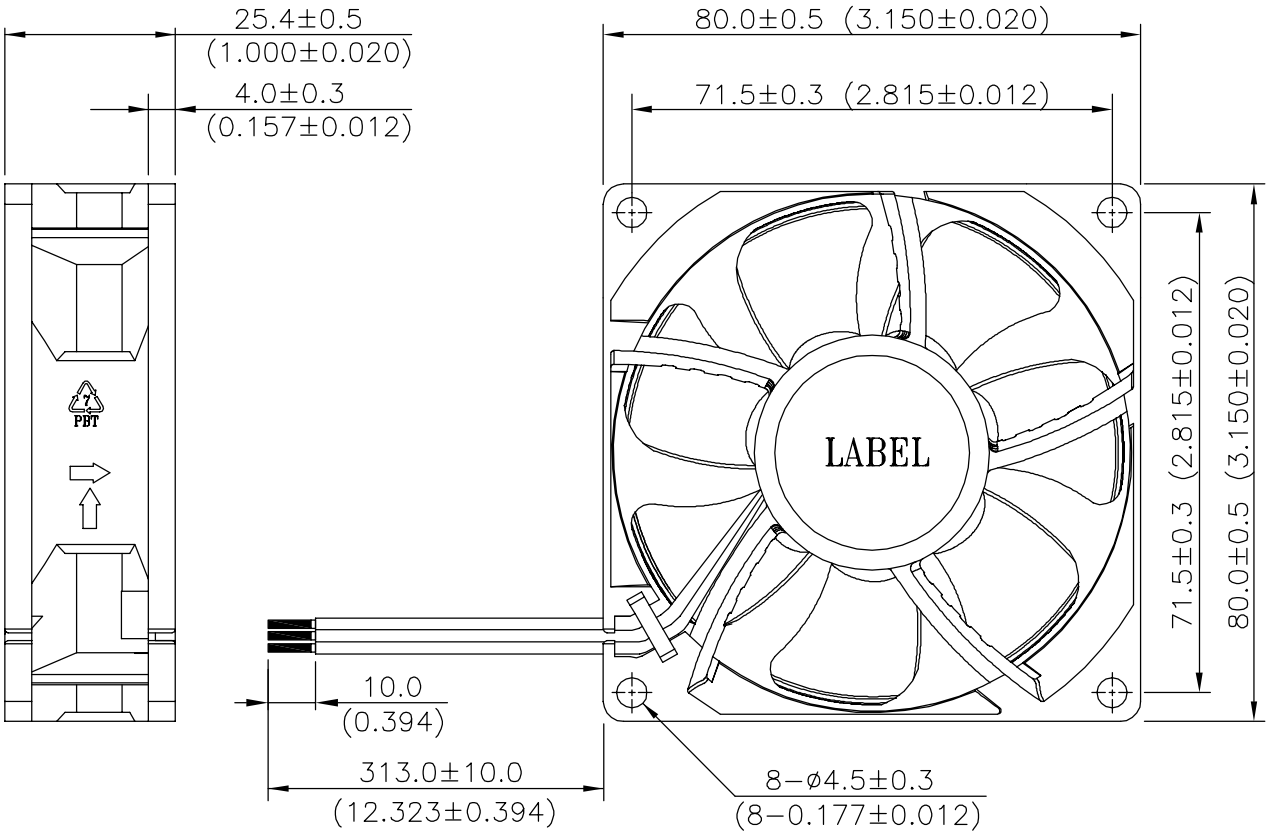

NOTES :

UNIT: MM(INCH)

1. LEAD WIRE: UL 1061 -F- AWG #24
   RED WIRE-------(+)
   BLUE WIRE------(F00)
   BLACK WIRE------(-)
2. THIS PRODUCT IS RoHS COMPLIANT.

PART NO:

DELTA MODEL: QFR0824SH-DT50

10. FREQUENCY GENERATOR (FG) SIGNAL:

1. OUTPUT CIRCUIT - OPEN COLLECTOR MODE:

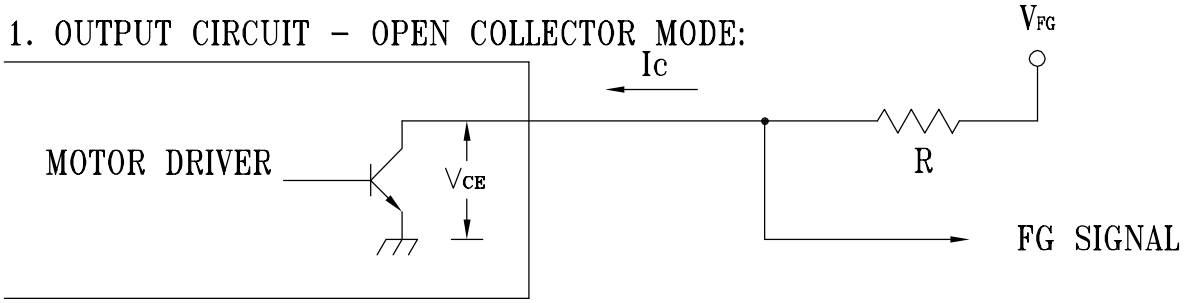

CAUTION:
THE LEAD WIRE OF FG SIGNAL CAN NOT TOUCH
THE LEAD WIRE OF POSITIVE OR NEGATIVE.

2. SPECIFICATION:

V_{CE} (sat)=0.5V MAX. V_{FG} =27.6VDC MAX.

I_C =5mA MAX. $R \geq V_{FG}/I_C$

3. FREQUENCY GENERATOR WAVEFORM:

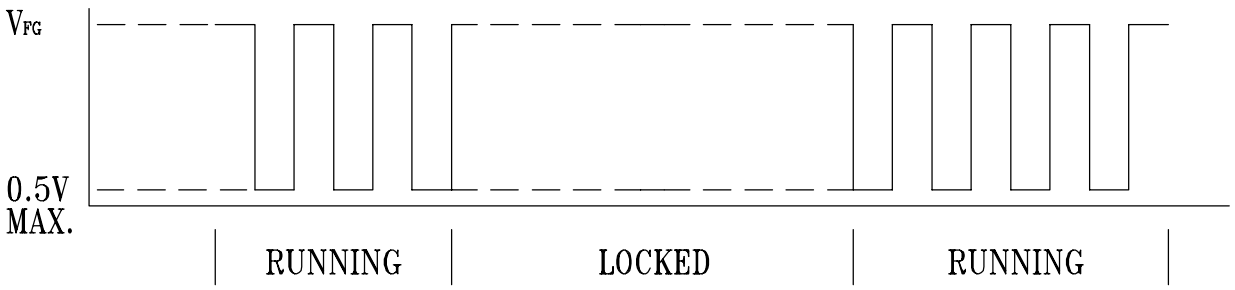

FAN RUNNING FOR 4 POLES

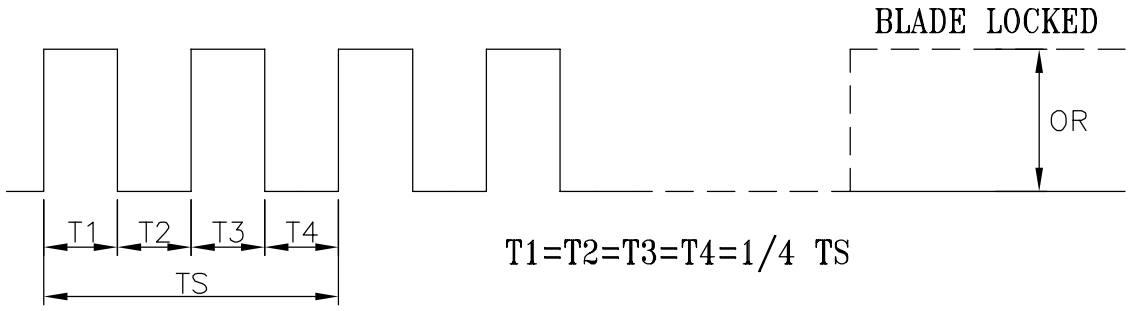

T1=T2=T3=T4=1/4 TS

N=R.P.M
TS=60/N(SEC)
*VOLTAGE LEVEL AFTER BLADE LOCKED
*4 POLES

Application Notice

1. Delta will not guarantee the performance of the products if the application condition falls outside the parameters set forth in the specification.
2. A written request should be submitted to Delta prior to approval if deviation from this specification is required.
3. Please exercise caution when handling fans. Damage may be caused when pressure is applied to the impeller, if the fans are handled by the lead wires, or if the fan was hard-dropped to the production floor.
4. Except as pertains to some special designs, there is no guarantee that the products will be free from any such safety problems or failures as caused by the introduction of powder, droplets of water or encroachment of insect into the hub.
5. The above-mentioned conditions are representative of some unique examples and viewed as the first point of reference prior to all other information.
6. It is very important to establish the correct polarity before connecting the fan to the power source. Positive (+) and Negative (-). Damage may be caused to the fans if connection is with reverse polarity, if there is no foolproof method to protect against such error specifically mentioned in this spec.
7. Delta fans without special protection are not suitable where any corrosive fluids are introduced to their environment.
8. Please ensure all fans are stored according to the storage temperature limits specified. Do not store fans in a high humidity environment. We highly recommend performance testing is conducted before shipping, if the fans have been stored over 6 months.
9. Not all fans are provided with the Lock Rotor Protection feature. If you impair the rotation of the impeller for the fans that do not have this function, the performance of those fans will lead to failure.
10. Please be cautious when mounting the fan. Incorrect mounting of fans may cause excess resonance, vibration and subsequent noise.
11. It is important to consider safety when testing the fans. A suitable fan guard should be fitted to the fan to guard against any potential for personal injury.
12. Except where specifically stated, all tests are carried out at room (ambient) temperature and relative humidity conditions of 25°C, 65% RH. The test value is only for fan performance itself.
13. Be certain to connect an " 4.7µF or greater" capacitor to the fan externally when the application calls for using multiple fans in parallel, to avoid any unstable power.