Excellent Integrated System Limited

Stocking Distributor

Click to view price, real time Inventory, Delivery & Lifecycle Information:

BUD Industries, Inc.
PBS-11275

For any questions, you can email us directly:
sales@integrated-circuit.com

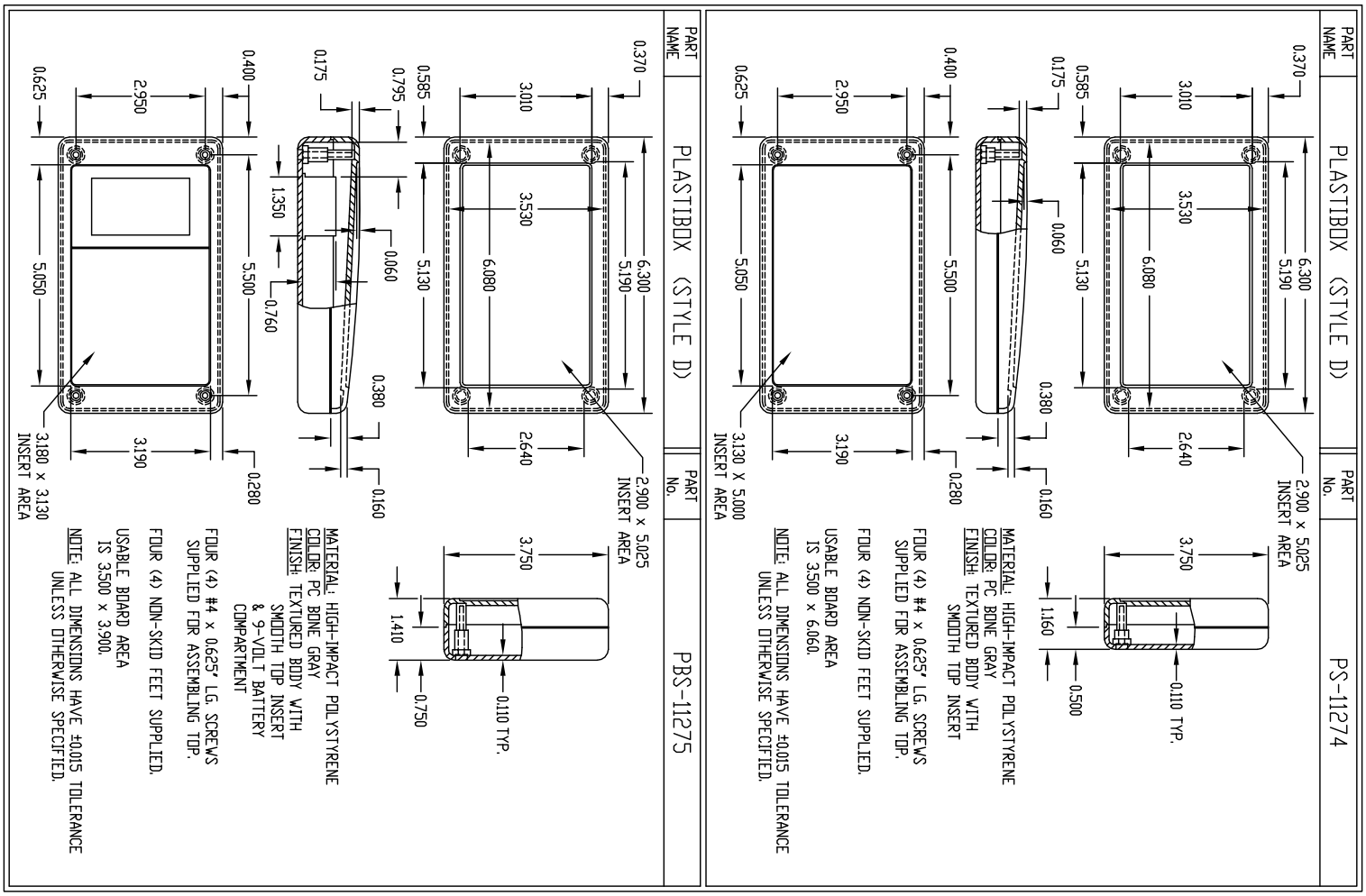
PART NAME
PLASTIBOX (STYLE D)
PART No.
PS-11274
0.370
3.010
0.585
0.175
3.530
6.080
5.130
6.300
5.190
2.640
0.060
0.380
0.160
2.900 x 5.025 INSERT AREA
3.750
1.160
0.500
0.110 TYP.
0.400
5.500
0.280
2.950
0.625
5.050
3.190
3.130 X 5.000 INSERT AREA
MATERIAL: HIGH-IMPACT POLYSTYRENE
COLOR: PC BONE GRAY
FINISH: TEXTURED BODY WITH SMOOTH TOP INSERT
FOUR (4) #4 x 0.625" LG. SCREWS SUPPLIED FOR ASSEMBLING TOP.
FOUR (4) NON-SKID FEET SUPPLIED.
USABLE BOARD AREA IS 3.500 x 6.060.
NOTE: ALL DIMENSIONS HAVE ±0.015 TOLERANCE UNLESS OTHERWISE SPECIFIED.
PART NAME
PLASTIBOX (STYLE D)
PART No.
PBS-11275
0.370
3.010
0.585
0.795
3.530
6.080
5.130
6.300
5.190
2.640
0.175
1.350
0.760
0.060
0.380
0.160
2.900 x 5.025 INSERT AREA
3.750
1.410
0.750
0.110 TYP.
0.400
5.500
0.280
2.950
0.625
5.050
3.190
3.180 x 3.130 INSERT AREA
MATERIAL: HIGH-IMPACT POLYSTYRENE
COLOR: PC BONE GRAY
FINISH: TEXTURED BODY WITH SMOOTH TOP INSERT & 9-VOLT BATTERY COMPARTMENT
FOUR (4) #4 x 0.625" LG. SCREWS SUPPLIED FOR ASSEMBLING TOP.
FOUR (4) NON-SKID FEET SUPPLIED.
USABLE BOARD AREA IS 3.500 x 3.900.
NOTE: ALL DIMENSIONS HAVE ±0.015 TOLERANCE UNLESS OTHERWISE SPECIFIED.