Excellent Integrated System Limited

Stocking Distributor

Click to view price, real time Inventory, Delivery & Lifecycle Information:

Phoenix Contact
2964173

For any questions, you can email us directly:
sales@integrated-circuit.com

ELR W 3/9-400
ELR W 3/9-500

Electronic Reversing-Load Relay for 3-Phase Networks

Data Sheet 01/2005

Features

Electronic Reversing-Load Relay

ELR W 3/9... electronic reversing-load relays are the practical and user-friendly further development of electronic load relays for 3-phase networks.

These components feature high switching frequencies, virtually unlimited service life, no spark interference, and completely silent switching at zero voltage crossing. The compact, DIN rail-mountable modules meet all the requirements of an electronic reversing contactor circuit that has been designed specifically for industrial applications. Both the interlocking of control inputs and the complete wiring of the load contacts are incorporated in the device. Costly locking switches and contact wiring are thus a thing of the past.

Cabling has been reduced to an absolute minimum. Only the following must be applied:

– Control voltage, supply voltage input and output
– 3-phase load

The status is clearly indicated by separate LEDs for "right rotation", "left rotation", "operating voltage" or "impermissible control".

A short circuit between two phases at the moment of switching is prevented by the integrated delay between the control pulse and the load control.

RCV protective circuits on the output side reduce voltage peaks that occur in the load circuit to a safe level and prevent damage to the output electronics.

ELR W 3/9...

The ELR W 3/9... is the fully electronic alternative to mechanical contactors. It features a compact design and low control power. A further advantage is the high-quality, safe screw connection technology.

In accordance with DIN VDE 0110 and DIN VDE 0636, a conductor cross section of 1.5 mm^2 (16 AWG), which must be fitted with one fuse each (10 A slow-blow as mains protection), is required to connect the electronic load relay to the 3-phase network.

Technical Data

Input Data (Input)	ELR W 3/9-400	ELR W 3/9-500
Operating voltage U_B	24 V DC +25%; -20%[1]	
Maximum current consumption	40 mA	
Control voltage right/left	24 V DC +25%; -20%[1]	
Input current right/left	6 mA, approximately	
Right rotation/left rotation switchover time (switch-on time)	20 ms	
Input wiring	LED, diode for protection against polarity reversal, surge protection	

[1] The operating voltage and control voltage inputs must be operated with power supply modules according to DIN 19240 (maximum 5% residual ripple). To prevent the inductive or capacitive coupling of disturbing pulses in long control cables, we recommend the use of shielded cables.

Output Data (Output)	ELR W 3/9-400	ELR W 3/9-500
Operating voltage (conductor voltage) 50 Hz/60 Hz	400 V AC	500 V AC
Operating voltage range	110 V AC - 440 V AC	110 V AC - 550 V AC
Reverse voltage	1000 V	1200 V
Maximum continuous load current	3 x 9 A	
Load current depending on the ambient operating temperature Operating time: 100% operating factor	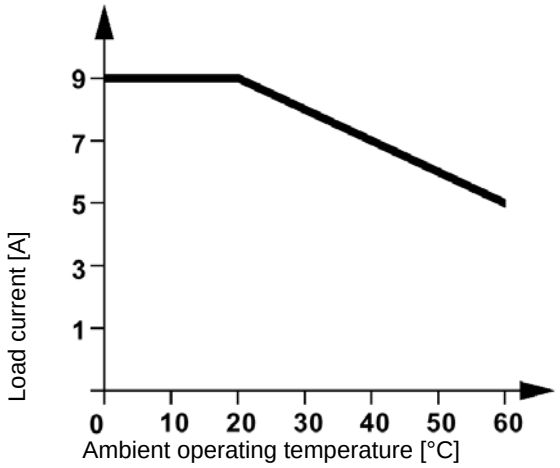 Figure 1 Load current depending on the ambient operating temperature	

Output Data (Output) (Continued)	ELR W 3/9-400	ELR W 3/9-500
Power dissipation depending on the load current Operating time: 100% operating factor	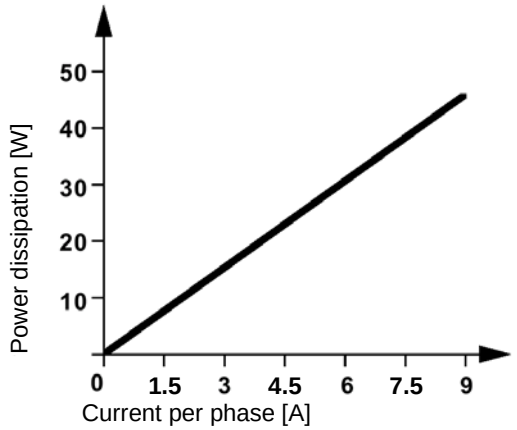 Figure 2 Power dissipation depending on the load current	
Surge current	230 A (t = 10 ms)	
Minimum load current	150 mA	
Residual voltage at I_N	1.7 V, typical	
Residual current in the OFF state	6 mA, typical	
Reversing frequency right rotation/left rotation (cos φ = 0.5)	10 Hz, maximum	
Output wiring	RCV circuit, red LED (error message)	

General Data	
Housing dimensions (length x width x height)	84 mm x 62 mm x 110 mm (3.307 x 2.441 x 4.331 in.)
Insulating housing version	Polycarbonate (PC), color: green
Test voltage I/O	2.5 kV_{rms}
Ambient operating temperature range	-20°C to +60°C (-4°F to +140°F)
Standards/specifications	EN 61000-4-4/DIN EN 61000-4-4/VDE 0847-4-4; EN 61000-4-5/DIN EN 61000-4-5/VDE 0847-4-5; IEC 60664/IEC 60664 A/DIN VDE 0110, basic insulation
Degree of protection according to IEC 60529/EN 60529/DIN VDE 0470-1	IP20
Mounting position	Vertical (DIN rail horizontal)
Mounting	Can be mounted with spacing ≥ 20 mm (0.787 in.)

Connection Data

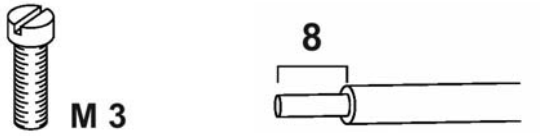

Figure 3 Connection data

The following cable cross sections can be connected:

Solid [mm^2]	Stranded [mm^2]	AWG	Stripping Length L [mm]
0.2 - 6	0.2 - 4	25 - 10	8 mm (0.31 in.)

Block diagram

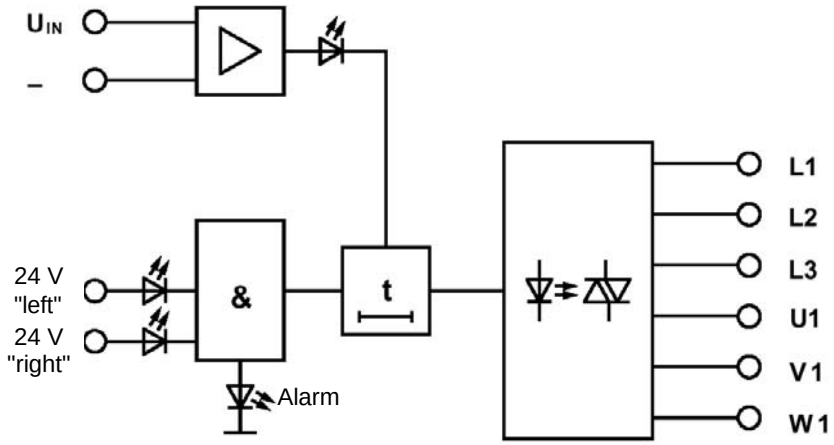

Figure 4 Block diagram

Ordering Data

Description	Order Designation	Order No.
Electronic reversing-load relay for directly controlling devices in a 3-phase network, with LED and protective circuit.	ELR W 3/9-400	29 64 17 3
	ELR W 3/9-500	29 64 18 6
For marking systems and assembly material, see CLIPLINE catalog.		

Make sure you always use the latest documentation.
It can be downloaded from www.download.phoenixcontact.com.

PHOENIX CONTACT GmbH & Co. KG
Flachsmarktstr. 8
32825 Blomberg
Germany

+49 - 52 35 - 30 0
+49 - 52 35 - 34 12 00
www.phoenixcontact.com
Worldwide Locations:
www.phoenixcontact.com/salesnetwork

© PHOENIX CONTACT 01/2005 Technical modifications reserved