Excellent Integrated System Limited

Stocking Distributor

Click to view price, real time Inventory, Delivery & Lifecycle Information:

Molex Connector Corporation
0764553604

For any questions, you can email us directly:
sales@integrated-circuit.com

Distributor of Molex Connector Corporation: Excellent Integrated System Limited
Datasheet of 0764553604 - IMPACT BP 2X16 GL SN
Contact us: sales@integrated-circuit.com Website: www.integrated-circuit.com

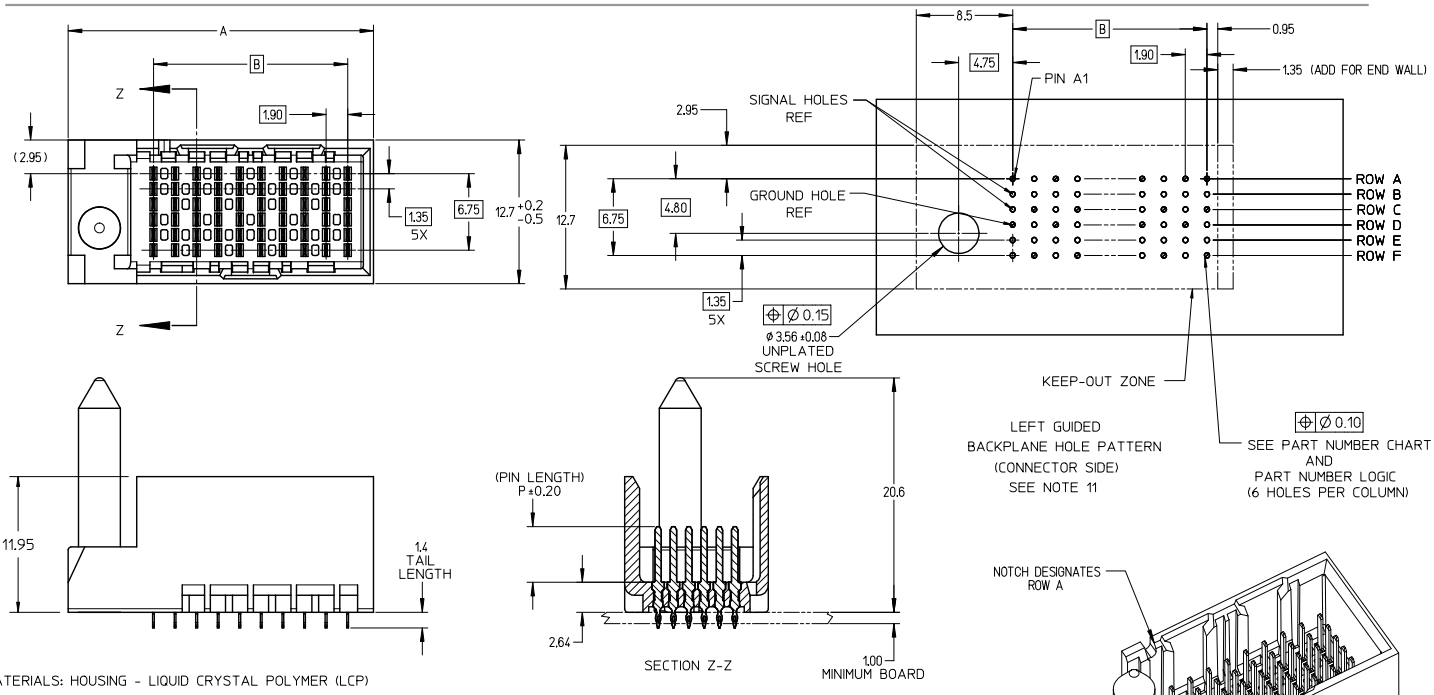

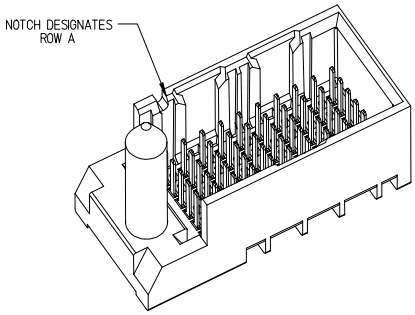

NOTES:

1. MATERIALS: HOUSING - LIQUID CRYSTAL POLYMER (LCP)
   GLASS-FILLED, UL94V-0
   TERMINALS - HIGH PERFORMANCE COPPER ALLOY
2. FINISH: 30µ MIN GOLD IN CONTACT AREA.
   SELECTIVE TIN ON PCB TAILS.
   NICKEL OVERALL.
3. REFER TO MOLEX PRODUCT SPECIFICATION PS-76060-999 FOR PERFORMANCE SPECIFICATIONS AND ADDITIONAL PCB INFORMATION.
4. THIS PART CONFORMS TO CLASS B REQUIREMENTS OF MOLEX COSMETIC SPEC PS-45499-002.
5. PACKAGE PER: PK-70873-761.
6. SEE SHEETS 2 & 3 FOR PART NUMBERS AND BOARD RELATIONSHIPS.
7. MATES WITH IMPACT DC SERIES NO. 76460.
8. KEEP OUT ZONE FOR BP HOUSING LENGTH INCLUDES AN ADDITIONAL 1.0MM TO ACCOMMODATE FOR SPACE REQUIRED BY DC FRONT HOUSING.
9. REFER TO MOLEX PCB ROUTING GUIDE AS-76060-990 FOR ANTIPAD AND ROUTING RECOMMENDATIONS.
10. CONNECTORS SUPPLIED WITH A 2-56 UNC-2A SCREW.
11. "THESE DIMENSIONS REPRESENT THE AREA NEEDED TO ACCOMMODATE CONNECTOR INSERTION AND REPAIR ON THE PC BOARD. THIS IS REFERRED TO AS THE "CONNECTOR KEEP OUT ZONE" AND DOES NOT REPRESENT THE ACTUAL PERIMETER OF THE CONNECTOR. WHEN LAYING OUT A PC BOARD FOR CONNECTORS STACKED TOGETHER, USE A 1.9mm PROGRESSION."

REV	DESCRIPTION
G	CONVERT TO LEAD-FREE EC NO: UCP2013-2078 DRWN:T IBARRA 2012/12/17 CH'KD:JB INGHAM 2012/12/18 APPR:S MILLER 2012/12/31

QUALITY SYMBOLS: 4 =0, 3 =0, 2 =0, 1 =0

GENERAL TOLERANCES (UNLESS SPECIFIED)

	mm	INCH
4 PLACES	± ---	± ---
3 PLACES	± ---	± ---
2 PLACES	± 0.13	± ---
1 PLACE	± 0.25	± ---
0 PLACE	± ---	± ---
ANGULAR ±1/2°		

DRAFT WHERE APPLICABLE MUST REMAIN WITHIN DIMENSIONS

DIMENSION STYLE: MM ONLY
SCALE: 4:1
DESIGN UNITS: METRIC
THIRD ANGLE PROJECTION

		DATE
DRAWN BY	MSANDBERG	2007/06/18
CHECKED BY	JLAURX	2007/06/18
APPROVED BY	JLAURX	2010/10/15

TITLE: IMPACT 2 PAIR HEADER LEFT GUIDED ASSEMBLY SALES DRAWING

molex

MATERIAL NO.: SEE TABLE
DOCUMENT NO.: SD-76455-002
SHEET NO.: 1 OF 3
SIZE: C

THIS DRAWING CONTAINS INFORMATION THAT IS PROPRIETARY TO MOLEX INCORPORATED AND SHOULD NOT BE NOT BE USED WITHOUT WRITTEN PERMISSION

tb_frame_C_P_AM_T
Rev. G 2012/01/11

Distributor of Molex Connector Corporation: Excellent Integrated System Limited
Datasheet of 0764553604 - IMPACT BP 2X16 GL SN
Contact us: sales@integrated-circuit.com Website: www.integrated-circuit.com

PART NUMBER TABLE

MATERIAL NUMBER	# OF COLUMNS	# OF DIFF PAIR	DIM "A"	DIM "B"	
76455-*10*	10	20	26.9	17.10	GUIDE LEFT END WALL OPTION
76455-*60*	16	32	38.3	28.50	

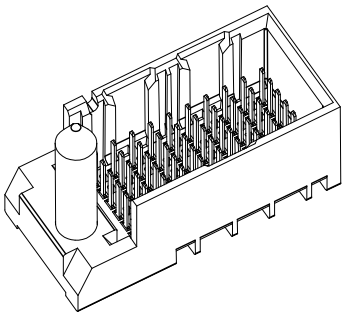

GUIDE LEFT END WALL OPTION

MATERIAL NUMBER	# OF COLUMNS	# OF DIFF PAIR	DIM "A"	DIM "B"	
76455-*10*	10	20	25.5	17.10	GUIDE LEFT OPEN WALL OPTION
76455-*60*	16	32	36.9	28.50	

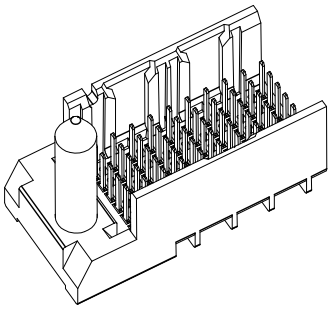

GUIDE LEFT OPEN WALL OPTION

PART NUMBER LOGIC

76455-**0*

MODULE TYPE
3 = GUIDE LEFT,TIN
7 = GUIDE LEFT END WALL, TIN

# OF COLUMNS
1 = 10 COL
6 = 16 COL

PIN LENGTH (P)
3 = 4.50 (SHORT COMPLIANT, 0.46±0.05 PTH)
4 = 4.90 (SHORT COMPLIANT, 0.46±0.05 PTH)
5 = 5.50 (SHORT COMPLIANT, 0.46±0.05 PTH)
6 = 4.50 (MICRO COMPLIANT, 0.39±0.05 PTH)
7 = 4.90 (MICRO COMPLIANT, 0.39±0.05 PTH)
8 = 5.50 (MICRO COMPLIANT, 0.39±0.05 PTH)

SEE SHEET 1
EC NO: UCP2013-2078 2012/12/17
DRWN:T.BARRA 2012/12/18
CH'KD:JB INGHAM 2012/12/31
APPR:SM.LLER
REV DESCRIPTION

QUALITY SYMBOLS

GENERAL TOLERANCES (UNLESS SPECIFIED)

	mm	INCH
4 PLACES	± ---	± ---
3 PLACES	± ---	± ---
2 PLACES	± 0.13	± ---
1 PLACE	± 0.25	± ---
0 PLACE	± ---	± ---
ANGULAR ±1/2°		

DRAFT WHERE APPLICABLE MUST REMAIN WITHIN DIMENSIONS

DIMENSION STYLE: MM ONLY
SCALE: 4:1
DESIGN UNITS: METRIC
THIRD ANGLE PROJECTION

		DATE
DRAWN BY	MSANDBERG	2007/06/18
CHECKED BY	JLAURX	2007/06/18
APPROVED BY	JLAURX	2010/10/15

TITLE: IMPACT 2 PAIR HEADER LEFT GUIDED ASSEMBLY SALES DRAWING

molex

MATERIAL NO.: SEE TABLE
DOCUMENT NO.: SD-76455-002
SHEET NO.: 2 OF 3
SIZE: C

THIS DRAWING CONTAINS INFORMATION THAT IS PROPRIETARY TO MOLEX INCORPORATED AND SHOULD NOT BE USED WITHOUT WRITTEN PERMISSION

tb_frame_C_P_AM_T
Rev. G 2012/01/11

Distributor of Molex Connector Corporation: Excellent Integrated System Limited
Datasheet of 0764553604 - IMPACT BP 2X16 GL SN
Contact us: sales@integrated-circuit.com Website: www.integrated-circuit.com

IMPACT 2 PAIR
BOARD RELATIONSHIPS

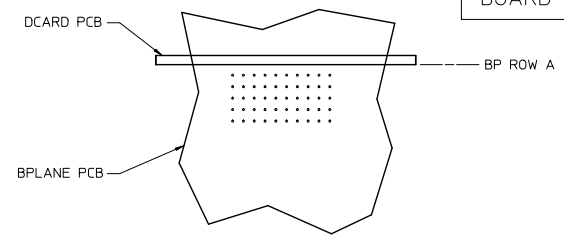

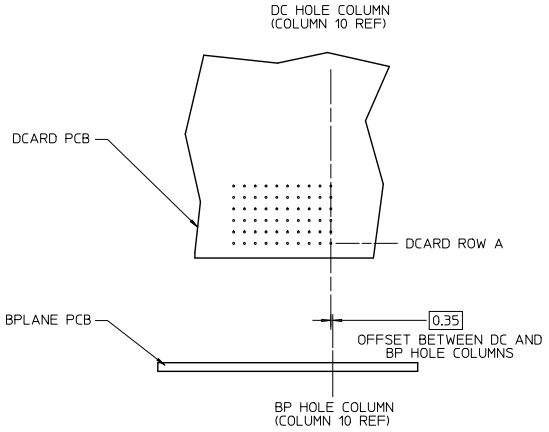

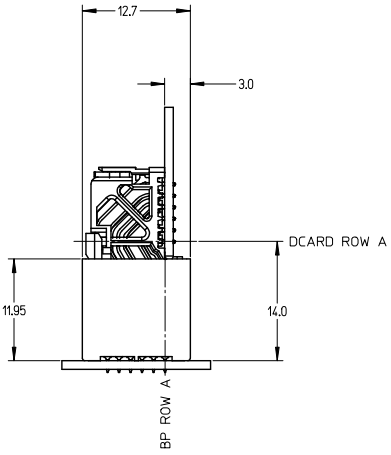

SEE SHEET 1	EC NO: UCF2013-2078	DRWN: I IBARRA 2012/12/17	CHKD: JB INGHAM 2012/12/18
G		APPR: S MILLER 2012/12/31	

REV | DESCRIPTION

QUALITY SYMBOLS: =0 / =0 / =0

GENERAL TOLERANCES (UNLESS SPECIFIED)

	mm	INCH
4 PLACES	± ---	± ---
3 PLACES	± ---	± ---
2 PLACES	± 0.13	± ---
1 PLACE	± 0.25	± ---
0 PLACE	± ---	± ---
ANGULAR ±1/2°		

DRAFT WHERE APPLICABLE MUST REMAIN WITHIN DIMENSIONS

DIMENSION STYLE: MM ONLY
SCALE: 2:1
DESIGN UNITS: METRIC
THIRD ANGLE PROJECTION

DRAWN BY	MSANDBERG	DATE 2007/06/18
CHECKED BY	JLAURX	DATE 2007/06/18
APPROVED BY	JLAURX	DATE 2010/10/15

TITLE: IMPACT 2 PAIR HEADER LEFT GUIDED ASSEMBLY SALES DRAWING

molex

MATERIAL NO.: SEE TABLE
DOCUMENT NO.: SD-76455-002
SHEET NO.: 3 OF 3
SIZE: C

THIS DRAWING CONTAINS INFORMATION THAT IS PROPRIETARY TO MOLEX INCORPORATED AND SHOULD NOT BE USED WITHOUT WRITTEN PERMISSION

tb_frame_C_P_AM_T
Rev. G 2012/01/11