Excellent Integrated System Limited

Stocking Distributor

Click to view price, real time Inventory, Delivery & Lifecycle Information:

Qualtek Electronics Corp.
FDD1-17238CBLW42

For any questions, you can email us directly:
sales@integrated-circuit.com

172x150x38mm DC AXIAL FAN FDD1-17238 Series

Features:

- Motor: Brushless DC
- Motor Protection: IC
- Bearing Type: Two Ball
- Connection: UL 1007 AWG 22, 360mm Wire Leads
- Frame Material: Aluminum Alloy
- Impeller Material: Steel
- Operating Temp:
  Two Ball: -20°C~70°C
- Life Expectancy:
  Two Ball: 50,000 Hours
  Two Ball: 100,000 Hours (-L)

Fan-S Division HPLC RoHS Compliant

Model No.	Volt.	Current	Power	Rated Speed	Maximum AirFlow		Maximum Static Pressure		Noise Level	Weight
	(VDC)	(A)	(W)	(rpm)	(CMM)	(CFM)	(InAq)	(mmAq)	(dB/A)	(g)
FDD1-17238CBAW4 * #	12	1.10	13.20	2800	5.95	210	0.571	14.5	52.0	880
FDD1-17238CBLW4 * #	12	1.59	19.08	3200	6.94	245	0.732	18.6	56.0	880
FDD1-17238CBMW4 * #	12	2.34	28.08	3600	7.79	275	0.909	23.1	60.0	880
FDD1-17238CBHW4 * #	12	3.33	39.96	4000	8.78	310	1.122	28.5	64.0	880
FDD1-17238DBAW4 * #	24	0.54	12.96	2800	5.95	210	0.571	14.5	52.0	880
FDD1-17238DBLW4 * #	24	0.78	18.72	3200	6.94	245	0.732	18.6	56.0	880
FDD1-17238DBMW4 * #	24	1.08	25.92	3600	7.79	275	0.909	23.1	60.0	880
FDD1-17238DBHW4 * #	24	1.38	33.12	4000	8.78	310	1.122	28.5	64.0	880
FDD1-17238DBJW4 * #	24	1.91	45.84	4400	9.63	340	1.315	33.4	68.0	880
FDD1-17238DBKW4 * #	24	2.34	56.16	4800	10.20	360	1.543	39.2	72.0	880
FDD1-17238EBAW4 * #	48	0.28	13.44	2800	5.95	210	0.571	14.5	52.0	880
FDD1-17238EBLW4 * #	48	0.37	17.76	3200	6.94	245	0.732	18.6	56.0	880
FDD1-17238EBMW4 * #	48	0.52	24.96	3600	7.79	275	0.909	23.1	60.0	880
FDD1-17238EBHW4 * #	48	0.68	32.64	4000	8.78	310	1.122	28.5	64.0	880
FDD1-17238EBJW4 * #	48	0.90	43.20	4400	9.63	340	1.315	33.4	68.0	880
FDD1-17238EBKW4 * #	48	1.13	54.24	4800	10.20	360	1.543	39.2	72.0	880

* Indicates "2" (No Special Function), "3" (Alarm), "4" (Speed Sensor), "9" (PWM), "B" (PWM + Speed Sensor) or "C" (Alarm + Speed Sensor)

\# Indicates "-L" (100,000 Hours Life Expectancy) or Leave Blank (50,000 Hours Life Expectancy)
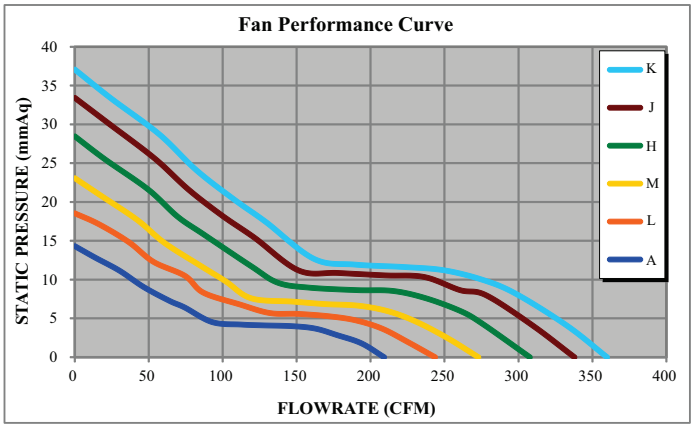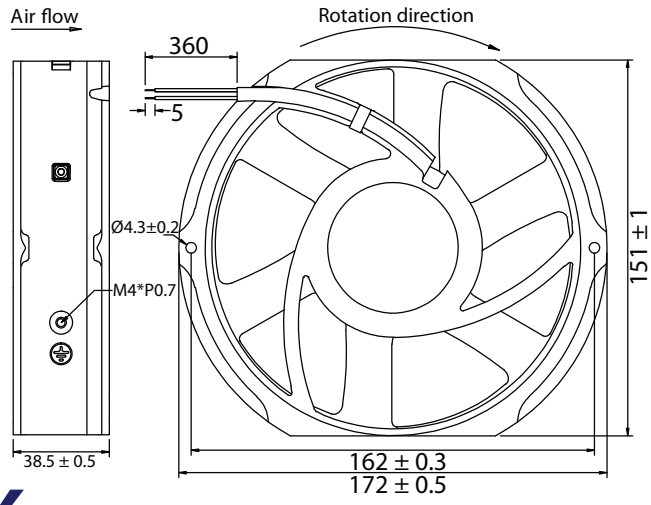
Noise is measured at the distance of one (1) meter from the axis of intake.