Excellent Integrated System Limited

Stocking Distributor

Click to view price, real time Inventory, Delivery & Lifecycle Information:

Texas Instruments
SN65HVD05D

For any questions, you can email us directly:
sales@integrated-circuit.com

Distributor of Texas Instruments: Excellent Integrated System Limited
Datasheet of SN65HVD05D - IC RS-485 TXRX HIGH OUT 8-SOIC
Contact us: sales@integrated-circuit.com Website: www.integrated-circuit.com

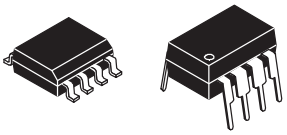

HIGH OUTPUT RS-485 TRANSCEIVERS

Check for Samples: SN65HVD05, SN65HVD06, SN75HVD05, SN65HVD07, SN75HVD06, SN75HVD07

FEATURES

- **Minimum Differential Output Voltage of 2.5 V Into a 54-Ω Load**
- **Open-Circuit, Short-Circuit, and Idle-Bus Failsafe Receiver**
- **1/8th Unit-Load Option Available (Up to 256 Nodes on the Bus)**
- **Bus-Pin ESD Protection Exceeds 16 kV HBM**
- **Driver Output Slew Rate Control Options**
- **Electrically Compatible With ANSI TIA/EIA-485-A Standard**
- **Low-Current Standby Mode: 1 µA Typical**
- **Glitch-Free Power-Up and Power-Down Protection for Hot-Plugging Applications**
- **Pin Compatible With Industry Standard SN75176**

APPLICATIONS

- **Data Transmission Over Long or Lossy Lines or Electrically Noisy Environments**
- **Profibus Line Interface**
- **Industrial Process Control Networks**
- **Point-of-Sale (POS) Networks**
- **Electric Utility Metering**
- **Building Automation**
- **Digital Motor Control**

DIFFERENTIAL OUTPUT VOLTAGE vs DIFFERENTIAL OUTPUT CURRENT

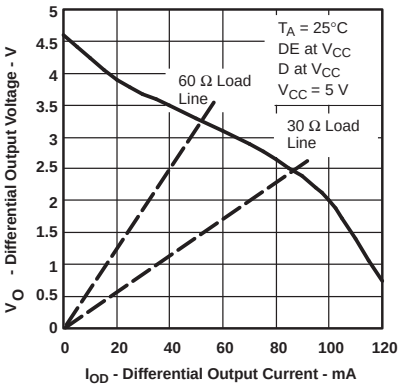

DESCRIPTION

The SN65HVD05, SN75HVD05, SN65HVD06, SN75HVD06, SN65HVD07, and SN75HVD07 combine a 3-state differential line driver and differential line receiver. They are designed for balanced data transmission and interoperate with ANSI TIA/EIA-485-A and ISO 8482E standard-compliant devices. The driver is designed to provide a differential output voltage greater than that required by these standards for increased noise margin. The drivers and receivers have active-high and active-low enables respectively, which can be externally connected together to function as direction control.

The driver differential outputs and receiver differential inputs connect internally to form a differential input/output (I/O) bus port that is designed to offer minimum loading to the bus whenever the driver is disabled or not powered. These devices feature wide positive and negative common-mode voltage ranges, making them suitable for party-line applications.

D OR P PACKAGE (TOP VIEW)

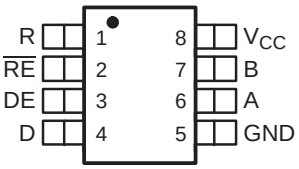

LOGIC DIAGRAM (POSITIVE LOGIC)

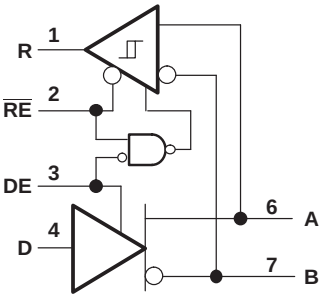

Please be aware that an important notice concerning availability, standard warranty, and use in critical applications of Texas Instruments semiconductor products and disclaimers thereto appears at the end of this data sheet.

PRODUCTION DATA information is current as of publication date. Products conform to specifications per the terms of the Texas Instruments standard warranty. Production processing does not necessarily include testing of all parameters.

Copyright © 2002–2009, Texas Instruments Incorporated

These devices have limited built-in ESD protection. The leads should be shorted together or the device placed in conductive foam during storage or handling to prevent electrostatic damage to the MOS gates.

ORDERING INFORMATION(1)

SIGNALING RATE	UNIT LOAD	DRIVER OUTPUT SLOPE CONTROL	T_A	PART NUMBER(2)		MARKED AS	
						PLASTIC DUAL-IN-LINE PACKAGE (PDIP)	SMALL OUTLINE IC (SOIC) PACKAGE
40 Mbps	1/2	No	–40°C to 85°C	SN65HVD05D	SN65HVD05P	65HVD05	VP05
10 Mbps	1/8	Yes		SN65HVD06D	SN65HVD06P	65HVD06	VP06
1 Mbps	1/8	Yes		SN65HVD07D	SN65HVD07P	65HVD07	VP07
40 Mbps	1/2	No	0°C to 70°C	SN75HVD05D	SN75HVD05P	75HVD05	VN05
10 Mbps	1/8	Yes		SN75HVD06D	SN75HVD06P	75HVD06	VN06
1 Mbps	1/8	Yes		SN75HVD07D	SN75HVD07P	75HVD07	VN07

(1) For the most current package and ordering information, see the Package Option Addendum at the end of this document, or see the TI web site at www.ti.com.
(2) The D package is available taped and reeled. Add an R suffix to the device type (i.e., SN65HVD05DR).

PACKAGE DISSIPATION RATINGS

(See Figure 12 and Figure 13)

PACKAGE	$T_A \le 25°C$ POWER RATING	DERATING FACTOR(1) ABOVE $T_A = 25°C$	$T_A = 70°C$ POWER RATING	$T_A = 85°C$ POWER RATING
D(2)	710 mW	5.7 mW/°C	455 mW	369 mW
D(3)	1282 mW	10.3 mW/°C	821 mW	667 mW
P	1000 mW	8.0 m W/°C	640 mW	520 mW

(1) This is the inverse of the junction-to-ambient thermal resistance when board-mounted and with no air flow.
(2) Tested in accordance with the Low-K thermal metric definitions of EIA/JESD51-3
(3) Tested in accordance with the High-K thermal metric definitions of EIA/JESD51-7

ABSOLUTE MAXIMUM RATINGS

over operating free-air temperature range unless otherwise noted(1) (2)

			SN65HVD05, SN65HVD06, SN65HVD07 SN75HVD05, SN75HVD06, SN75HVD07
Supply voltage range, V_{CC}			–0.3 V to 6 V
Voltage range at A or B			–9 V to 14 V
Input voltage range at D, DE, R or $\overline{RE}$			–0.5 V to V_{CC} + 0.5 V
Voltage input range, transient pulse, A and B, through 100 Ω (see Figure 11)			–50 V to 50 V
Receiver output current, I_O			–11 mA to 11mA
Electrostatic discharge	Human body model(3)	A, B, and GND	16 kV
		All pins	4 kV
	Charged-device model(4)	All pins	1 kV
Continuous total power dissipation			See Dissipation Rating Table

(1) Stresses beyond those listed under "absolute maximum ratings" may cause permanent damage to the device. These are stress ratings only, and functional operation of the device at these or any other conditions beyond those indicated under" recommended operating conditions" is not implied. Exposure to absolute-maximum-rated conditions for extended periods may affect device reliability.
(2) All voltage values, except differential I/O bus voltages, are with respect to network ground terminal.
(3) Tested in accordance with JEDEC Standard 22, Test Method A114-A.
(4) Tested in accordance with JEDEC Standard 22, Test Method C101.

Copyright © 2002–2009, Texas Instruments Incorporated

RECOMMENDED OPERATING CONDITIONS

		MIN	NOM	MAX	UNIT
Supply voltage, V_{CC}		4.5		5.5	V
Voltage at any bus terminal (separately or common mode) V_I or V_{IC}		–7 (1)		12	V
High-level input voltage, V_{IH}	D, DE, $\overline{RE}$	2			V
Low-level input voltage, V_{IL}	D, DE, $\overline{RE}$			0.8	V
Differential input voltage, V_{ID} (see Figure 7)		–12		12	V
High-level output current, I_{OH}	Driver	–100			mA
	Receiver	–8			mA
Low-level output current, I_{OL}	Driver			100	mA
	Receiver			8	mA
Operating free-air temperature, T_A	SN65HVD05	–40		85	°C
	SN65HVD06	–40		85	°C
	SN65HVD07	–40		85	°C
	SN75HVD05	0		70	°C
	SN75HVD06	0		70	°C
	SN75HVD07	0		70	°C

(1) The algebraic convention, in which the least positive (most negative) limit is designated as minimum is used in this data sheet.

DRIVER ELECTRICAL CHARACTERISTICS

over operating free-air temperature range unless otherwise noted

PARAMETER			TEST CONDITIONS		MIN	TYP (1)	MAX	UNIT
V_{IK}	Input clamp voltage		I_I = –18 mA		–1.5			V
$\lvert V_{OD}\rvert$	Differential output voltage		No Load				V_{CC}	V
			R_L = 54 Ω, See Figure 4		2.5			V
			V_{test} = –7 V to 12 V, See Figure 2		2.2			V
$\Delta\lvert V_{OD}\rvert$	Change in magnitude of differential output voltage		See Figure 4 and Figure 2		–0.2		0.2	V
$V_{OC(SS)}$	Steady-state common-mode output voltage		See Figure 3		2.2		3.3	V
$\Delta V_{OC(SS)}$	Change in steady-state common-mode output voltage		See Figure 3		–0.1		0.1	V
$V_{OC(PP)}$	Peak-to-peak common-mode output voltage	HVD05	See Figure 3			600		mV
		HVD06	See Figure 3			500		mV
		HVD07	See Figure 3			900		mV
I_{OZ}	High-impedance output current		See receiver input currents					
I_I	Input current	D			–100		0	µA
		DE			0		100	µA
I_{OS}	Short-circuit output current		–7 V ≤ V_O ≤ 12 V		–250		250	mA
$C_{(diff)}$	Differential output capacitance		V_{ID} = 0.4 sin (4E6πt) + 0.5 V, DE at 0 V			16		pF
I_{CC}	Supply current		$\overline{RE}$ at V_{CC}, D and DE at V_{CC}, No load	Receiver disabled and driver enabled		9	15	mA
			$\overline{RE}$ at V_{CC}, D at V_{CC} DE at 0 V, No load	Receiver disabled and driver disabled (standby)		1	5	µA
			$\overline{RE}$ at 0 V, D and DE at V_{CC}, No load	Receiver enabled and driver enabled		9	15	mA

(1) All typical values are at 25°C and with a 5-V supply.

Copyright © 2002–2009, Texas Instruments Incorporated

DRIVER SWITCHING CHARACTERISTICS

over operating free-air temperature range unless otherwise noted

PARAMETER			TEST CONDITIONS	MIN	TYP(1)	MAX	UNIT
t_{PLH}	Propagation delay time, low-to-high-level output	HVD05	R_L = 54 Ω, C_L = 50 pF, See Figure 4		6.5	11	ns
		HVD06			27	40	
		HVD07			250	400	
t_{PHL}	Propagation delay time, high-to-low-level output	HVD05			6.5	11	ns
		HVD06			27	40	
		HVD07			250	400	
t_r	Differential output signal rise time	HVD05		2.7	3.6	6	ns
		HVD06		18	28	55	
		HVD07		150	300	450	
t_f	Differential output signal fall time	HVD05		2.7	3.6	6	ns
		HVD06		18	28	55	
		HVD07		150	300	450	
$t_{sk(p)}$	Pulse skew ($\lvert t_{PHL} - t_{PLH} \rvert$)	HVD05				2	ns
		HVD06				2.5	
		HVD07				10	
$t_{sk(pp)}$ (2)	Part-to-part skew	HVD05				3.5	ns
		HVD06				14	
		HVD07				100	
t_{PZH1}	Propagation delay time, high-impedance-to-high-level output	HVD05	$\overline{RE}$ at 0 V, R_L = 110 Ω, See Figure 5			25	ns
		HVD06				45	
		HVD07				250	
t_{PHZ}	Propagation delay time, high-level-to-high-impedance output	HVD05				25	ns
		HVD06				60	
		HVD07				250	
t_{PZL1}	Propagation delay time, high-impedance-to-low-level output	HVD05	$\overline{RE}$ at 0 V, R_L = 110 Ω, See Figure 6			15	ns
		HVD06				45	
		HVD07				200	
t_{PLZ}	Propagation delay time, low-level-to-high-impedance output	HVD05				14	ns
		HVD06				90	
		HVD07				550	
t_{PZH2}	Propagation delay time, standby-to-high-level output		R_L = 110Ω , $\overline{RE}$ at 3 V, See Figure 5			6	μs
t_{PZL2}	Propagation delay time, standby-to-low-level output		R_L = 110 Ω, $\overline{RE}$ at 3 V, See Figure 6			6	μs

(1) All typical values are at 25°C and with a 5-V supply.
(2) $t_{sk(pp)}$ is the magnitude of the difference in propagation delay times between any specified terminals of two devices when both devices operate with the same supply voltages, at the same temperature, and have identical packages and test circuits.

Copyright © 2002–2009, Texas Instruments Incorporated

Distributor of Texas Instruments: Excellent Integrated System Limited
Datasheet of SN65HVD05D - IC RS-485 TXRX HIGH OUT 8-SOIC
Contact us: sales@integrated-circuit.com Website: www.integrated-circuit.com

RECEIVER ELECTRICAL CHARACTERISTICS

over operating free-air temperature range unless otherwise noted

PARAMETER			TEST CONDITIONS			MIN	TYP(1)	MAX	UNIT
V_{IT+}	Positive-going input threshold voltage		I_O = –8 mA					–0.01	V
V_{IT-}	Negative-going input threshold voltage		I_O = 8 mA			–0.2			V
V_{hys}	Hysteresis voltage (V_{IT+} - V_{IT-})						35		mV
V_{IK}	Enable-input clamp voltage		I_I = –18 mA			–1.5			V
V_{OH}	High-level output voltage		V_{ID} = 200 mV,	I_{OH} = –8 mA,	See Figure 7	4			V
V_{OL}	Low-level output voltage		V_{ID} = -200 mV,	I_{OL} = 8 mA,	See Figure 7			0.4	V
I_{OZ}	High-impedance-state output current		V_O = 0 or V_{CC}	$\overline{RE}$ at V_{CC}		–1		1	µA
I_I	Bus input current	HVD05	Other inputat 0 V	V_A or V_B = 12 V			0.23	0.5	mA
				V_A or V_B = 12 V,	V_{CC} = 0 V		0.3	0.5	
				V_A or V_B = –7 V		–0.4	0.13		
				V_A or V_B = –7 V,	V_{CC} = 0 V	–0.4	0.15		
		HVD06 HVD07	Other inputat 0 V	V_A or V_B = 12 V			0.06	0.1	mA
				V_A or V_B = 12 V,	V_{CC} = 0 V		0.08	0.13	
				V_A or V_B = –7 V		–0.1	0.05		
				V_A or V_B = –7 V,	V_{CC} = 0 V	–0.05	0.03		
I_{IH}	High-level input current, $\overline{RE}$		V_{IH} = 2 V			–60	26.4		µA
I_{IL}	Low-level input current, $\overline{RE}$		V_{IL} = 0.8 V			–60	27.4		µA
$C_{(diff)}$	Differential input capacitance		V_I = 0.4 sin (4E6πt) + 0.5 V, DE at 0 V				16		pF
I_{CC}	Supply current		$\overline{RE}$ at 0 V, D and DE at 0 V, No load	Receiver enabled and driver disabled			5	10	mA
			$\overline{RE}$ at V_{CC}, DE at 0 V, D at V_{CC}, No load	Receiver disabled and driver disabled (standby)			1	5	µA
			$\overline{RE}$ at 0 V, D and DE at V_{CC}, No load	Receiver enabled and driver enabled			9	15	mA

(1) All typical values are at 25°C and with a 5-V supply.

Copyright © 2002–2009, Texas Instruments Incorporated

RECEIVER SWITCHING CHARACTERISTICS

over operating free-air temperature range unless otherwise noted

PARAMETER			TEST CONDITIONS	MIN	TYP(1)	MAX	UNIT
t_{PLH}	Propagation delay time, low-to-high-level output 1/2 UL	HVD05	V_{ID} = –1.5 V to 1.5 V, C_L = 15 pF, See Figure 8		14.6	25	ns
t_{PHL}	Propagation delay time, high-to-low-level output 1/2 UL	HVD05			14.6	25	ns
t_{PLH}	Propagation delay time, low-to-high-level output 1/8 UL	HVD06			55	70	ns
		HVD07			55	70	
t_{PHL}	Propagation delay time, high-to-low-level output 1/8 UL	HVD06			55	70	ns
		HVD07			55	70	
$t_{sk(p)}$	Pulse skew ($\lvert t_{PHL} – t_{PLH}\rvert$)	HVD05				2	ns
		HVD06				4.5	
		HVD07				4.5	
$t_{sk(pp)}$ (2)	Part-to-part skew	HVD05				6.5	ns
		HVD06				14	
		HVD07				14	
t_r	Output signal rise time		C_L = 15 pF, See Figure 8		2	3	ns
t_f	Output signal fall time				2	3	
t_{PZH1}	Output enable time to high level		C_L = 15 pF, DE at 3 V, See Figure 9			10	ns
t_{PZL1}	Output enable time to low level					10	
t_{PHZ}	Output disable time from high level					15	
t_{PLZ}	Output disable time from low level					15	
t_{PZH2}	Propagation delay time, standby-to-high-level output		C_L = 15 pF, DE at 0, See Figure 10			6	µs
t_{PZL2}	Propagation delay time, standby-to-low-level output					6	

(1) All typical values are at 25°C and with a 5-V supply.
(2) $t_{sk(pp)}$ is the magnitude of the difference in propagation delay times between any specified terminals of two devices when both devices operate with the same supply voltages, at the same temperature, and have identical packages and test circuits.

PARAMETER MEASUREMENT INFORMATION

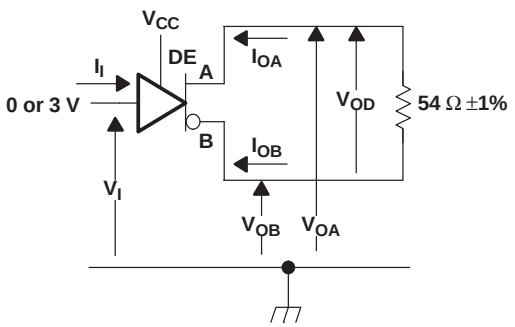

Figure 1. Driver V_{OD} Test Circuit and Voltage and Current Definitions

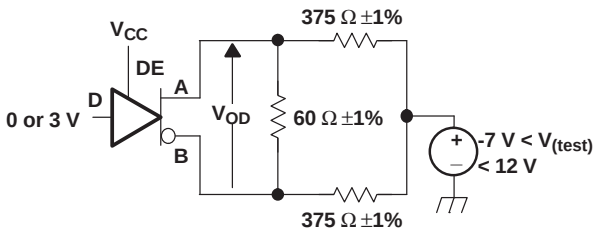

Figure 2. Driver V_{OD} With Common-Mode Loading Test Circuit

Copyright © 2002–2009, Texas Instruments Incorporated

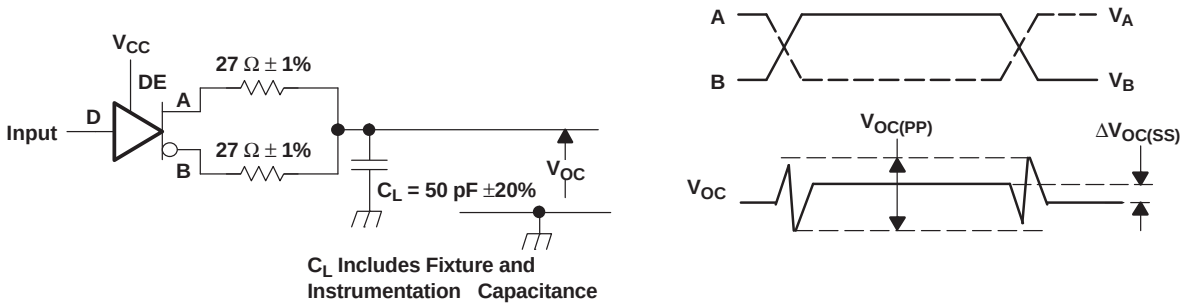

Input: PRR = 500 kHz, 50% Duty Cycle, t_r<6ns, t_f<6ns, Z_O = 50 Ω

Figure 3. Test Circuit and Definitions for the Driver Common-Mode Output Voltage

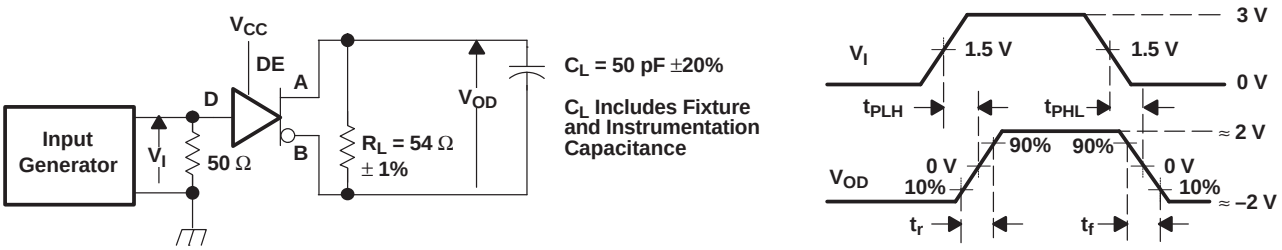

Generator: PRR = 500 kHz, 50% Duty Cycle, t_r <6 ns, t_f <6 ns, Z_o = 50 Ω

Figure 4. Driver Switching Test Circuit and Voltage Waveforms

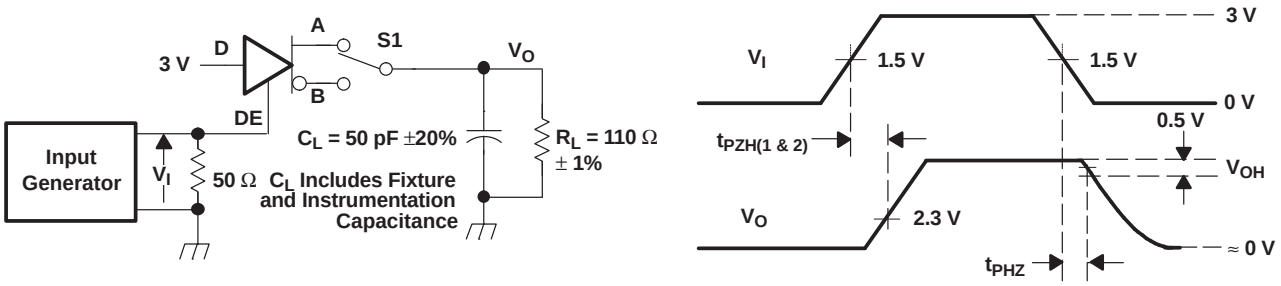

Generator: PRR = 100 kHz, 50% Duty Cycle, t_r <6 ns, t_f <6 ns, Z_o = 50 Ω

Figure 5. Driver High-Level Enable and Disable Time Test Circuit and Voltage Waveforms

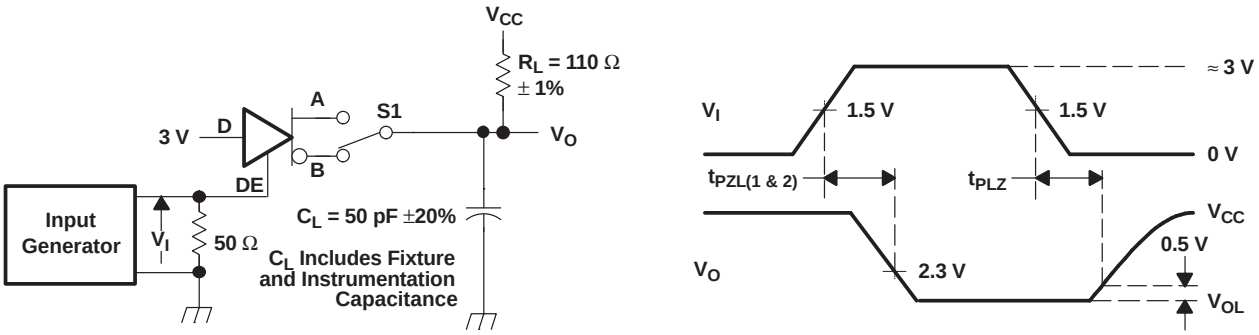

Generator: PRR = 100 kHz, 50% Duty Cycle, t_r <6 ns, t_f <6 ns, Z_o = 50 Ω

Figure 6. Driver Low-Level Output Enable and Disable Time Test Circuit and Voltage Waveforms

Distributor of Texas Instruments: Excellent Integrated System Limited
Datasheet of SN65HVD05D - IC RS-485 TXRX HIGH OUT 8-SOIC
Contact us: sales@integrated-circuit.com Website: www.integrated-circuit.com

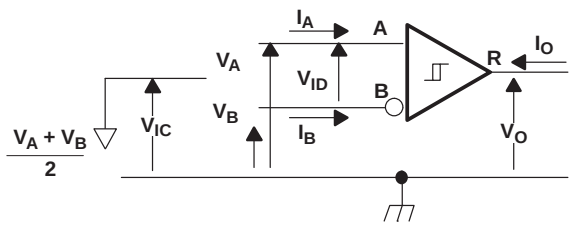

Figure 7. Receiver Voltage and Current Definitions

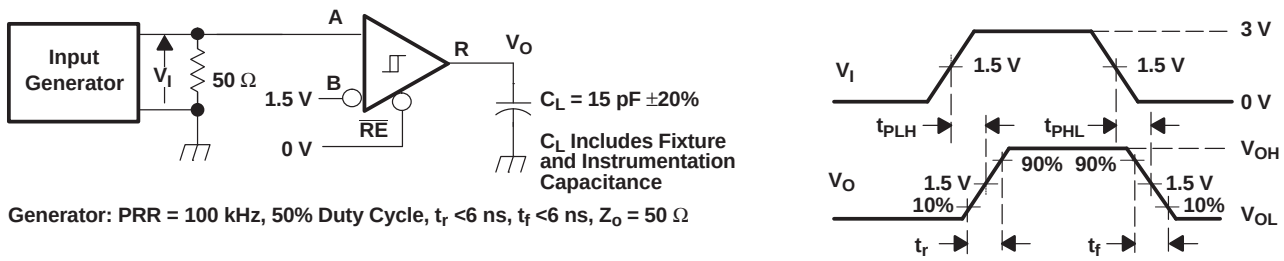

Figure 8. Receiver Switching Test Circuit and Voltage Waveforms

Copyright © 2002–2009, Texas Instruments Incorporated

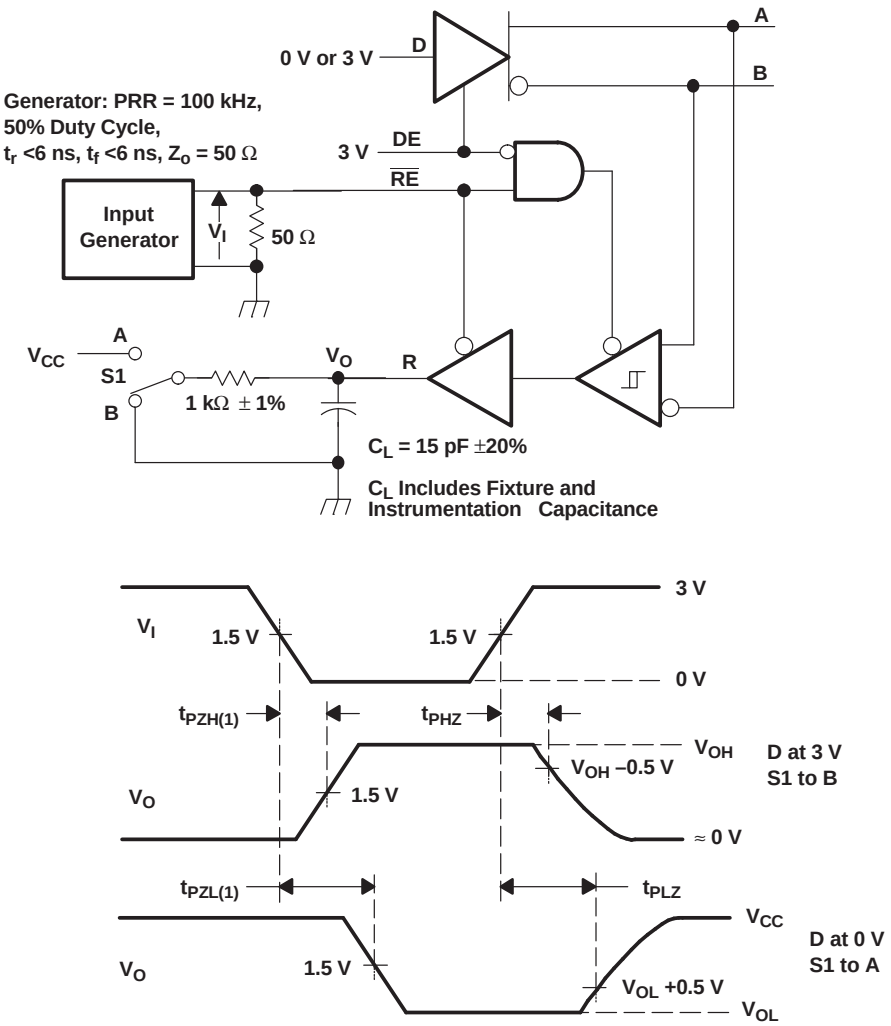

Figure 9. Receiver Enable and Disable Time Test Circuit and Voltage Waveforms With Drivers Enabled

Distributor of Texas Instruments: Excellent Integrated System Limited
Datasheet of SN65HVD05D - IC RS-485 TXRX HIGH OUT 8-SOIC
Contact us: sales@integrated-circuit.com Website: www.integrated-circuit.com

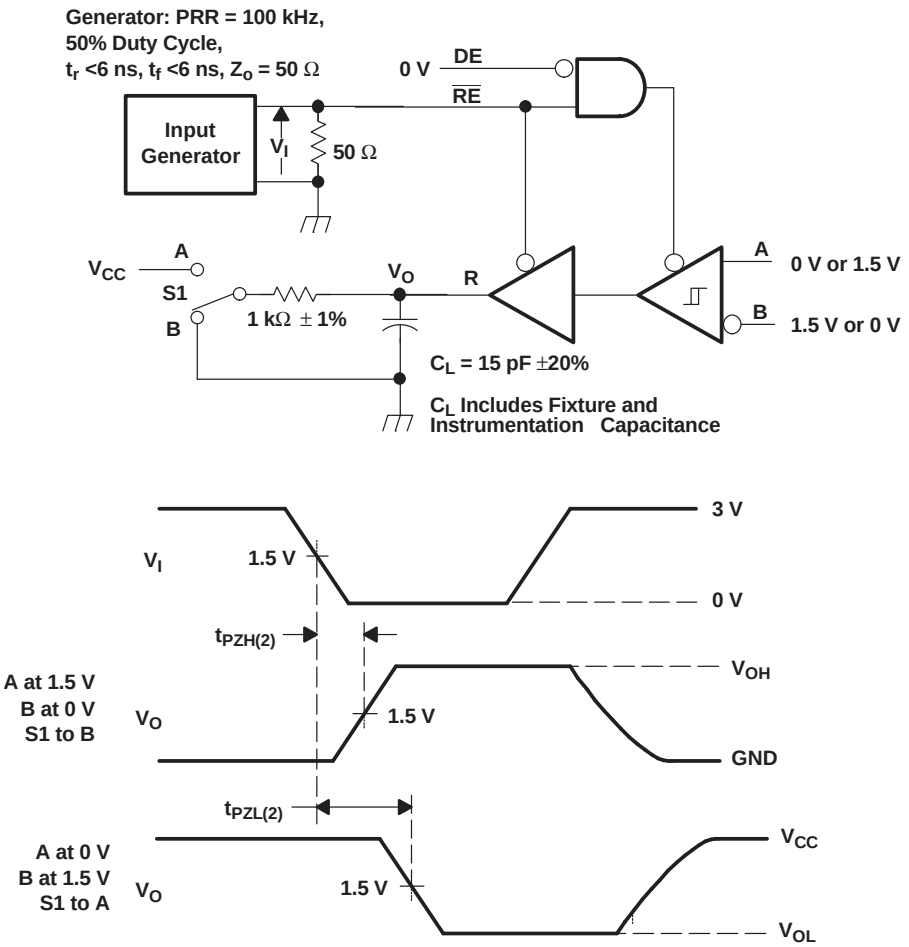

Figure 10. Receiver Enable Time From Standby (Driver Disabled)

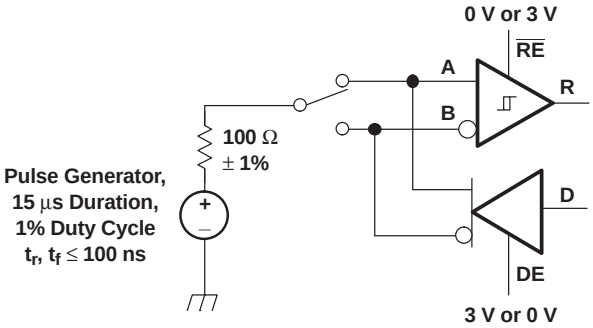

NOTE: This test is conducted to test survivability only. Data stability at the R output is not specified.

Figure 11. Test Circuit, Transient Over Voltage Test

Copyright © 2002–2009, Texas Instruments Incorporated

Distributor of Texas Instruments: Excellent Integrated System Limited
Datasheet of SN65HVD05D - IC RS-485 TXRX HIGH OUT 8-SOIC
Contact us: sales@integrated-circuit.com Website: www.integrated-circuit.com

FUNCTION TABLES

Table 1. DRIVER

INPUT	ENABLE	OUTPUTS	
D	DE	A	B
H	H	H	L
L	H	L	H
X	L	Z	Z
Open	H	H	L
X	Open	Z	Z

Table 2. RECEIVER(1)

DIFFERENTIAL INPUTS	ENABLE	OUTPUT
$V_{ID} = V_A - V_B$	$\overline{RE}$	R
$V_{ID} \leq -0.2$ V	L	L
-0.2 V $< V_{ID} < -0.01$ V	L	?
-0.01 V$\leq V_{ID}$	L	H
X	H	Z
Open Circuit	L	H
Short Circuit	L	H
IDLE Bus	L	H
X	Open	Z

(1) H = high level; L = low level; Z = high impedance; X = irrelevant; ? = indeterminate

Receiver Failsafe

The differential receiver is “failsafe” to invalid bus states caused by:

- open bus conditions such as a disconnected connector,
- shorted bus conditions such as cable damage shorting the twisted-pair together, or
- idle bus conditions that occur when no driver on the bus is actively driving

In any of these cases, the differential receiver outputs a failsafe logic High state, so that the output of the receiver is not indeterminate.

Receiver failsafe is accomplished by offsetting the receiver thresholds so that the “input indeterminate” range does not include zero volts differential. To comply with the RS-422 and RS-485 standards, the receiver output *must* output a High when the differential input V_{ID} is more positive than +200 mV, and *must* output a Low when the V_{ID} is more negative than -200 mV. The receiver parameters which determine the failsafe performance are V_{IT+} and V_{IT-} and V_{HYS}. As seen in the Receiver Electrical Characteristics table, differential signals more negative than -200 mV will always cause a Low receiver output. Similarly, differential signals more positive than +200 mV will *always* cause a High receiver output.

When the differential input signal is close to zero, it will still be above the V_{IT+} threshold, and the receiver output is High. Only when the differential input is more negative than V_{IT-} will the receiver output transition to a Low state. So, the noise immunity of the receiver inputs during a bus fault condition includes the receiver hysteresis value V_{HYS} (the separation between V_{IT+} and V_{IT-}) as well as the value of V_{IT+}.

Distributor of Texas Instruments: Excellent Integrated System Limited
Datasheet of SN65HVD05D - IC RS-485 TXRX HIGH OUT 8-SOIC
Contact us: sales@integrated-circuit.com Website: www.integrated-circuit.com

EQUIVALENT INPUT AND OUTPUT SCHEMATIC DIAGRAMS

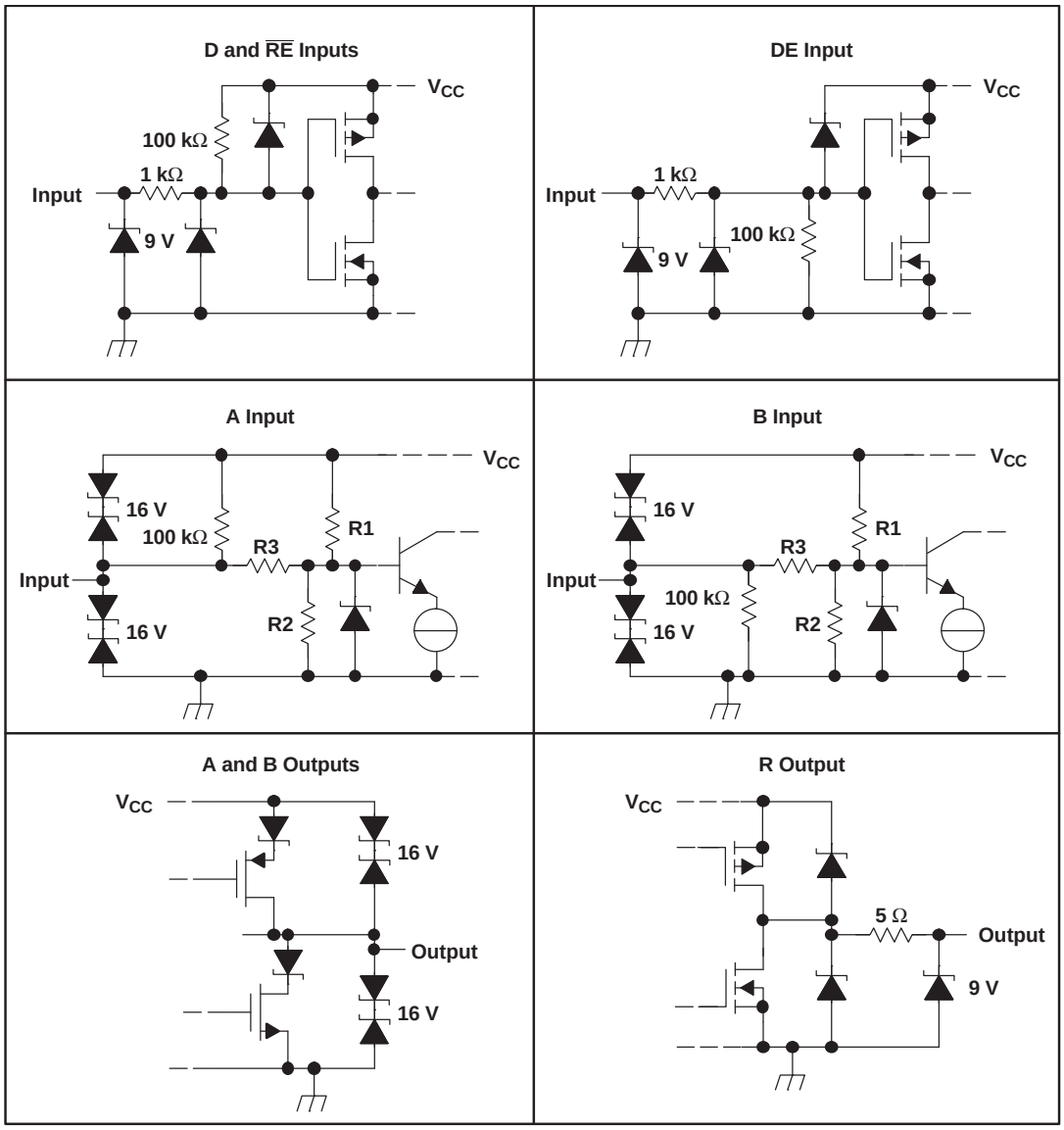

	R1/R2	R3
SN65HVD05	9 kΩ	45 kΩ
SN65HVD06	36 kΩ	180 kΩ
SN65HVD07	36 kΩ	180 kΩ

Copyright © 2002–2009, Texas Instruments Incorporated

TYPICAL CHARACTERISTICS

HVD05
MAXIMUM RECOMMENDED STILL-AIR OPERATING TEMPERATURE vs SIGNALING RATE (D-PACKAGE)

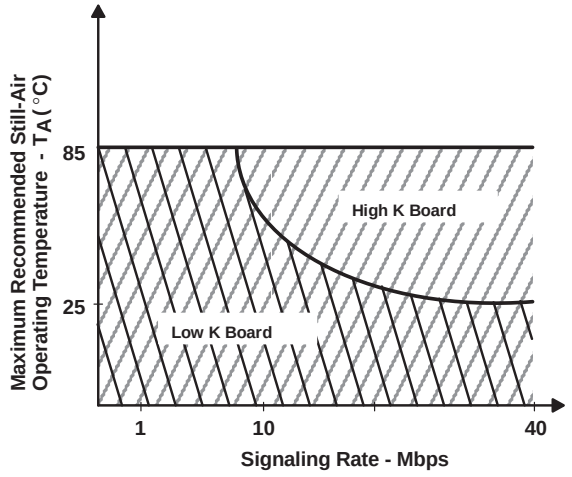

Figure 12.

HVD06
MAXIMUM RECOMMENDED STILL-AIR OPERATING TEMPERATURE vs SIGNALING RATE (D-PACKAGE)

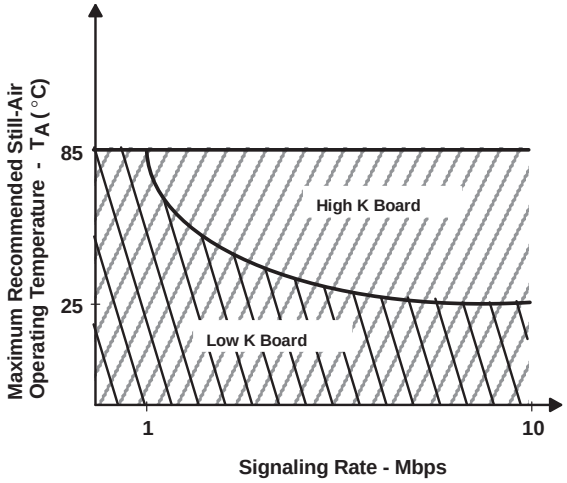

Figure 13.

HVD05
RMS SUPPLY CURRENT vs SIGNALILNG RATE

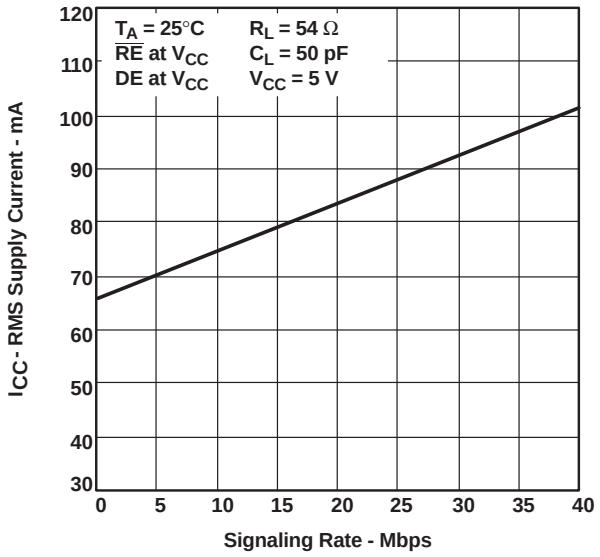

Figure 14.

HVD06
RMS SUPPLY CURRENT vs SIGNALING RATE

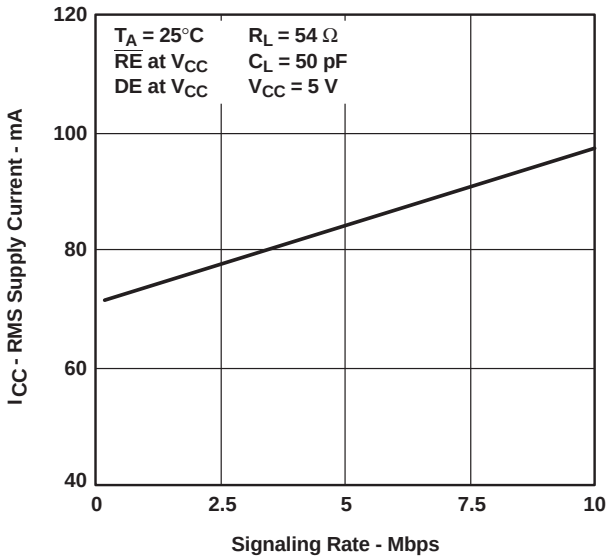

Figure 15.

Distributor of Texas Instruments: Excellent Integrated System Limited
Datasheet of SN65HVD05D - IC RS-485 TXRX HIGH OUT 8-SOIC
Contact us: sales@integrated-circuit.com Website: www.integrated-circuit.com

TYPICAL CHARACTERISTICS (continued)

HVD07
RMS SUPPLY CURRENT
vs
SIGNALING RATE

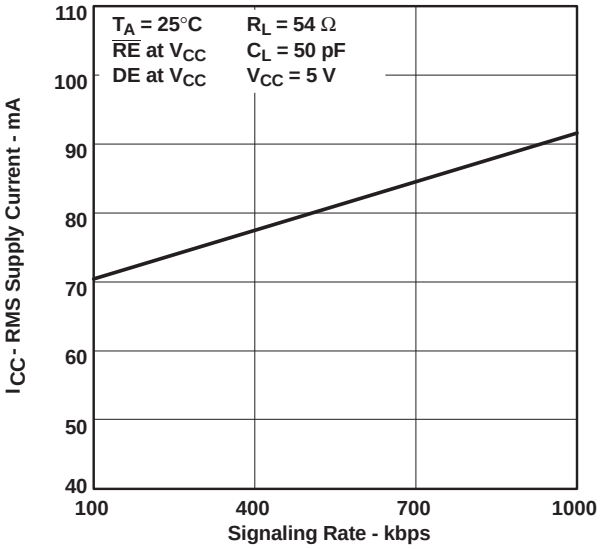

Figure 16.

BUS INPUT CURRENT
vs
BUS INPUT VOLTAGE

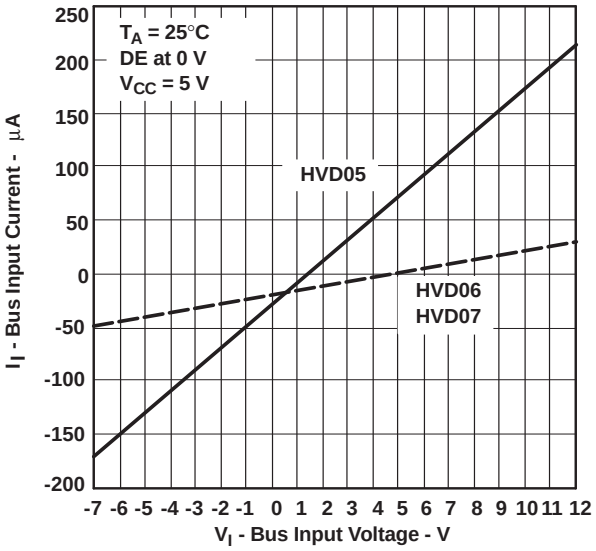

Figure 17.

DRIVER HIGH-LEVEL OUTPUT CURRENT
vs
HIGH-LEVEL OUTPUT VOLTAGE

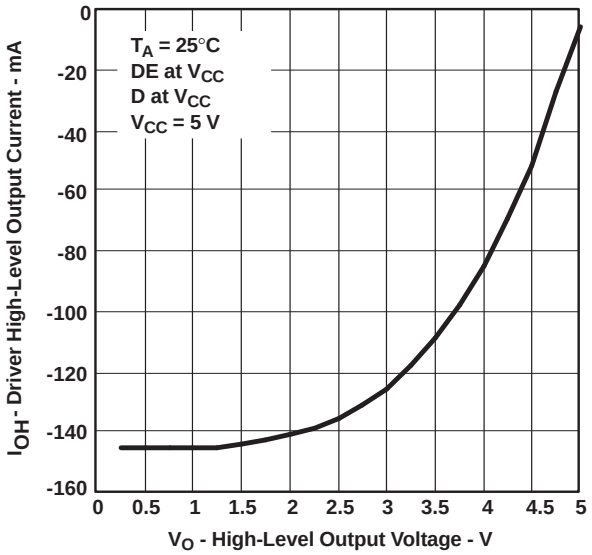

Figure 18.

DRIVER LOW-LEVEL OUTPUT CURRENT
vs
LOW-LEVEL OUTPUT VOLTAGE

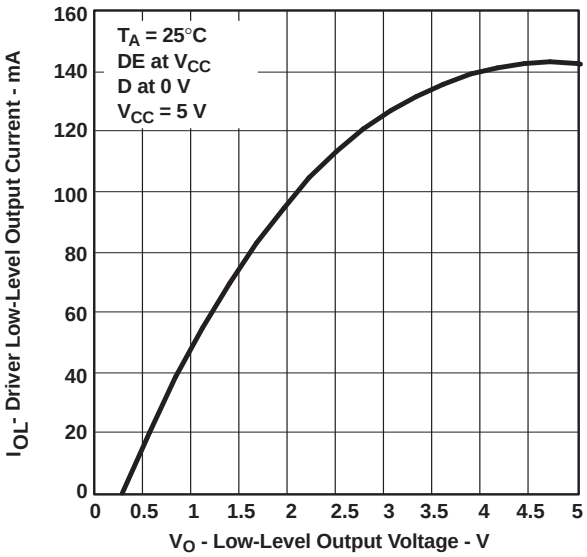

Figure 19.

Copyright © 2002–2009, Texas Instruments Incorporated

TYPICAL CHARACTERISTICS (continued)

DIFFERENTIAL OUTPUT VOLTAGE vs FREE-AIR TEMPERATURE

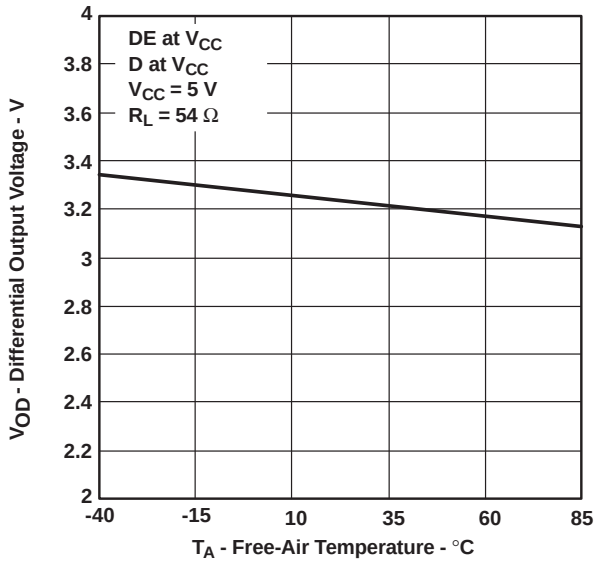

Figure 20.

DRIVER OUTPUT CURRENT vs SUPPLY VOLTAGE

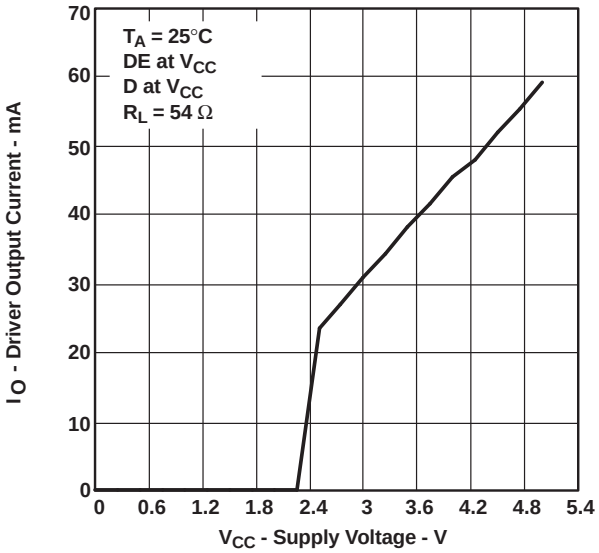

Figure 21.

DIFFERENTIAL OUTPUT VOLTAGE vs DIFFERENTIAL OUTPUT CURRENT

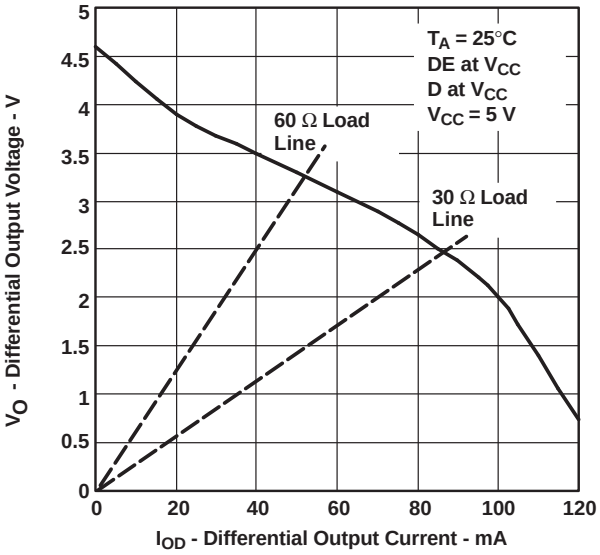

Figure 22.

ENABLE TIME vs COMMON-MODE VOLTAGE (SEE Figure 24)

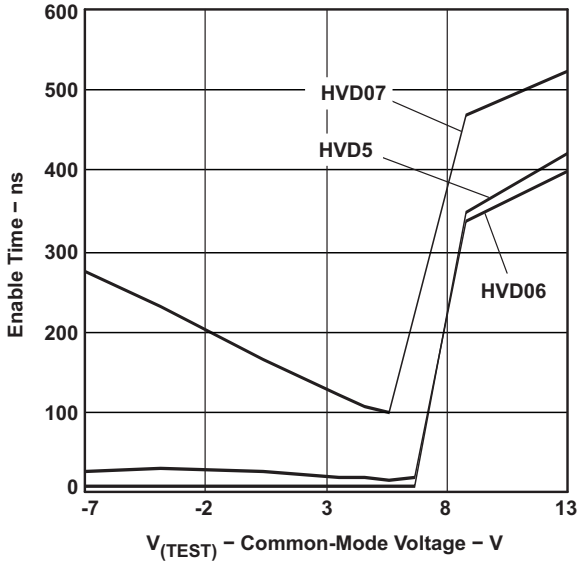

Figure 23.

TYPICAL CHARACTERISTICS (continued)

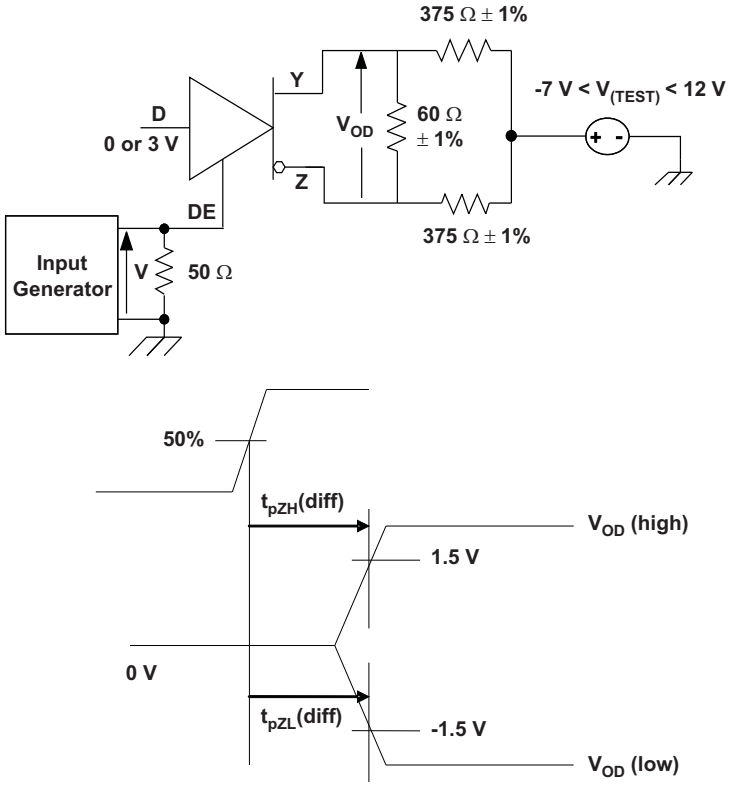

Figure 24. Driver Enable Time From DE to V_{OD}

The time $t_{pZL}(x)$ is the measure from DE to $V_{OD}(x)$. V_{OD} is valid when it is greater than 1.5 V.

Copyright © 2002–2009, Texas Instruments Incorporated

Distributor of Texas Instruments: Excellent Integrated System Limited
Datasheet of SN65HVD05D - IC RS-485 TXRX HIGH OUT 8-SOIC
Contact us: sales@integrated-circuit.com Website: www.integrated-circuit.com

APPLICATION INFORMATION

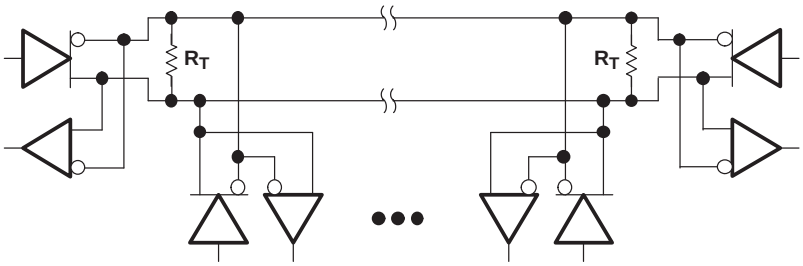

Device	Number of Devices on Bus
HVD05	64
HVD06	256
HVD07	256

NOTE: The line should be terminated at both ends with its characteristic impedance ($R_T = Z_O$).
Stub lengths off the main line should be kept as short as possible.

Figure 25. Typical Application Circuit

REVISION HISTORY

Changes from Revision D (July 2006) to Revision E **Page**

- Added IDLE Bus to the Receivers Function Table 11
- Added the Receiver Failsafe paragraph. 11

Distributor of Texas Instruments: Excellent Integrated System Limited
Datasheet of SN65HVD05D - IC RS-485 TXRX HIGH OUT 8-SOIC
Contact us: sales@integrated-circuit.com Website: www.integrated-circuit.com

PACKAGING INFORMATION

Orderable Device	Status (1)	Package Type	Package Drawing	Pins	Package Qty	Eco Plan (2)	Lead/Ball Finish (6)	MSL Peak Temp (3)	Op Temp (°C)	Device Marking (4/5)	Samples
SN65HVD05D	ACTIVE	SOIC	D	8	75	Green (RoHS & no Sb/Br)	CU NIPDAU	Level-1-260C-UNLIM	-40 to 85	VP05	Samples
SN65HVD05DG4	ACTIVE	SOIC	D	8	75	Green (RoHS & no Sb/Br)	CU NIPDAU	Level-1-260C-UNLIM	-40 to 85	VP05	Samples
SN65HVD05DR	ACTIVE	SOIC	D	8	2500	Green (RoHS & no Sb/Br)	CU NIPDAU	Level-1-260C-UNLIM	-40 to 85	VP05	Samples
SN65HVD05DRG4	ACTIVE	SOIC	D	8	2500	Green (RoHS & no Sb/Br)	CU NIPDAU	Level-1-260C-UNLIM	-40 to 85	VP05	Samples
SN65HVD05P	ACTIVE	PDIP	P	8	50	Pb-Free (RoHS)	CU NIPDAU	N / A for Pkg Type	-40 to 85	65HVD05	Samples
SN65HVD05PE4	ACTIVE	PDIP	P	8	50	Pb-Free (RoHS)	CU NIPDAU	N / A for Pkg Type	-40 to 85	65HVD05	Samples
SN65HVD06D	ACTIVE	SOIC	D	8	75	Green (RoHS & no Sb/Br)	CU NIPDAU	Level-1-260C-UNLIM	-40 to 85	VP06	Samples
SN65HVD06DG4	ACTIVE	SOIC	D	8	75	Green (RoHS & no Sb/Br)	CU NIPDAU	Level-1-260C-UNLIM	-40 to 85	VP06	Samples
SN65HVD06DR	ACTIVE	SOIC	D	8	2500	Green (RoHS & no Sb/Br)	CU NIPDAU	Level-1-260C-UNLIM	-40 to 85	VP06	Samples
SN65HVD06P	ACTIVE	PDIP	P	8	50	Pb-Free (RoHS)	CU NIPDAU	N / A for Pkg Type	-40 to 85	65HVD06	Samples
SN65HVD07D	ACTIVE	SOIC	D	8	75	Green (RoHS & no Sb/Br)	CU NIPDAU	Level-1-260C-UNLIM	-40 to 85	VP07	Samples
SN65HVD07DG4	ACTIVE	SOIC	D	8	75	Green (RoHS & no Sb/Br)	CU NIPDAU	Level-1-260C-UNLIM	-40 to 85	VP07	Samples
SN65HVD07DR	ACTIVE	SOIC	D	8	2500	Green (RoHS & no Sb/Br)	CU NIPDAU	Level-1-260C-UNLIM	-40 to 85	VP07	Samples
SN65HVD07DRG4	ACTIVE	SOIC	D	8	2500	Green (RoHS & no Sb/Br)	CU NIPDAU	Level-1-260C-UNLIM	-40 to 85	VP07	Samples
SN65HVD07P	ACTIVE	PDIP	P	8	50	Pb-Free (RoHS)	CU NIPDAU	N / A for Pkg Type	-40 to 85	65HVD07	Samples
SN65HVD07PE4	ACTIVE	PDIP	P	8	50	Pb-Free (RoHS)	CU NIPDAU	N / A for Pkg Type	-40 to 85	65HVD07	Samples
SN75HVD05D	ACTIVE	SOIC	D	8	75	Green (RoHS & no Sb/Br)	CU NIPDAU	Level-1-260C-UNLIM	0 to 70	VN05	Samples

Distributor of Texas Instruments: Excellent Integrated System Limited
Datasheet of SN65HVD05D - IC RS-485 TXRX HIGH OUT 8-SOIC
Contact us: sales@integrated-circuit.com Website: www.integrated-circuit.com

Orderable Device	Status (1)	Package Type	Package Drawing	Pins	Package Qty	Eco Plan (2)	Lead/Ball Finish (6)	MSL Peak Temp (3)	Op Temp (°C)	Device Marking (4/5)	Samples
SN75HVD05DG4	ACTIVE	SOIC	D	8	75	Green (RoHS & no Sb/Br)	CU NIPDAU	Level-1-260C-UNLIM	0 to 70	VN05	Samples
SN75HVD05P	ACTIVE	PDIP	P	8	50	Pb-Free (RoHS)	CU NIPDAU	N / A for Pkg Type	0 to 70	75HVD05	Samples
SN75HVD06D	ACTIVE	SOIC	D	8	75	Green (RoHS & no Sb/Br)	CU NIPDAU	Level-1-260C-UNLIM	0 to 70	VN06	Samples
SN75HVD06DR	ACTIVE	SOIC	D	8	2500	Green (RoHS & no Sb/Br)	CU NIPDAU	Level-1-260C-UNLIM	0 to 70	VN06	Samples
SN75HVD06P	ACTIVE	PDIP	P	8	50	Pb-Free (RoHS)	CU NIPDAU	N / A for Pkg Type	0 to 70	75HVD06	Samples
SN75HVD07D	ACTIVE	SOIC	D	8	75	Green (RoHS & no Sb/Br)	CU NIPDAU	Level-1-260C-UNLIM	0 to 70	VN07	Samples
SN75HVD07DG4	ACTIVE	SOIC	D	8	75	Green (RoHS & no Sb/Br)	CU NIPDAU	Level-1-260C-UNLIM	0 to 70	VN07	Samples
SN75HVD07DR	ACTIVE	SOIC	D	8	2500	Green (RoHS & no Sb/Br)	CU NIPDAU	Level-1-260C-UNLIM	0 to 70	VN07	Samples
SN75HVD07DRG4	ACTIVE	SOIC	D	8	2500	Green (RoHS & no Sb/Br)	CU NIPDAU	Level-1-260C-UNLIM	0 to 70	VN07	Samples
SN75HVD07P	ACTIVE	PDIP	P	8	50	Pb-Free (RoHS)	CU NIPDAU	N / A for Pkg Type	0 to 70	75HVD07	Samples

(1) The marketing status values are defined as follows:
ACTIVE: Product device recommended for new designs.
LIFEBUY: TI has announced that the device will be discontinued, and a lifetime-buy period is in effect.
NRND: Not recommended for new designs. Device is in production to support existing customers, but TI does not recommend using this part in a new design.
PREVIEW: Device has been announced but is not in production. Samples may or may not be available.
OBSOLETE: TI has discontinued the production of the device.

(2) Eco Plan - The planned eco-friendly classification: Pb-Free (RoHS), Pb-Free (RoHS Exempt), or Green (RoHS & no Sb/Br) - please check http://www.ti.com/productcontent for the latest availability information and additional product content details.
TBD: The Pb-Free/Green conversion plan has not been defined.
Pb-Free (RoHS): TI's terms "Lead-Free" or "Pb-Free" mean semiconductor products that are compatible with the current RoHS requirements for all 6 substances, including the requirement that lead not exceed 0.1% by weight in homogeneous materials. Where designed to be soldered at high temperatures, TI Pb-Free products are suitable for use in specified lead-free processes.
Pb-Free (RoHS Exempt): This component has a RoHS exemption for either 1) lead-based flip-chip solder bumps used between the die and package, or 2) lead-based die adhesive used between the die and leadframe. The component is otherwise considered Pb-Free (RoHS compatible) as defined above.
Green (RoHS & no Sb/Br): TI defines "Green" to mean Pb-Free (RoHS compatible), and free of Bromine (Br) and Antimony (Sb) based flame retardants (Br or Sb do not exceed 0.1% by weight in homogeneous material)

Distributor of Texas Instruments: Excellent Integrated System Limited
Datasheet of SN65HVD05D - IC RS-485 TXRX HIGH OUT 8-SOIC
Contact us: sales@integrated-circuit.com Website: www.integrated-circuit.com

(3) MSL, Peak Temp. - The Moisture Sensitivity Level rating according to the JEDEC industry standard classifications, and peak solder temperature.

(4) There may be additional marking, which relates to the logo, the lot trace code information, or the environmental category on the device.

(5) Multiple Device Markings will be inside parentheses. Only one Device Marking contained in parentheses and separated by a "~" will appear on a device. If a line is indented then it is a continuation of the previous line and the two combined represent the entire Device Marking for that device.

(6) Lead/Ball Finish - Orderable Devices may have multiple material finish options. Finish options are separated by a vertical ruled line. Lead/Ball Finish values may wrap to two lines if the finish value exceeds the maximum column width.

Important Information and Disclaimer: The information provided on this page represents TI's knowledge and belief as of the date that it is provided. TI bases its knowledge and belief on information provided by third parties, and makes no representation or warranty as to the accuracy of such information. Efforts are underway to better integrate information from third parties. TI has taken and continues to take reasonable steps to provide representative and accurate information but may not have conducted destructive testing or chemical analysis on incoming materials and chemicals. TI and TI suppliers consider certain information to be proprietary, and thus CAS numbers and other limited information may not be available for release.

In no event shall TI's liability arising out of such information exceed the total purchase price of the TI part(s) at issue in this document sold by TI to Customer on an annual basis.

PACKAGE MATERIALS INFORMATION

www.ti.com 13-Aug-2009

TAPE AND REEL INFORMATION

REEL DIMENSIONS

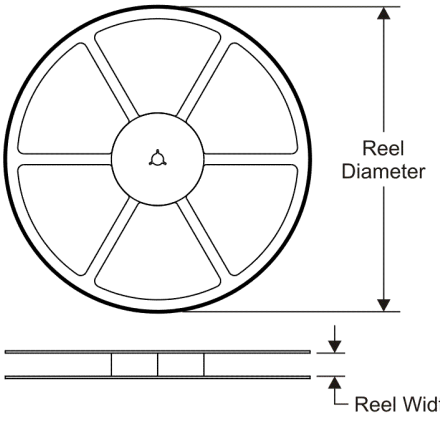

TAPE DIMENSIONS

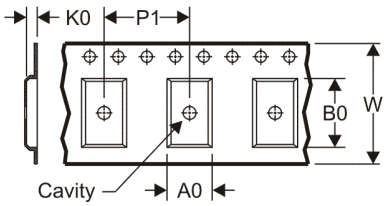

A0	Dimension designed to accommodate the component width
B0	Dimension designed to accommodate the component length
K0	Dimension designed to accommodate the component thickness
W	Overall width of the carrier tape
P1	Pitch between successive cavity centers

QUADRANT ASSIGNMENTS FOR PIN 1 ORIENTATION IN TAPE

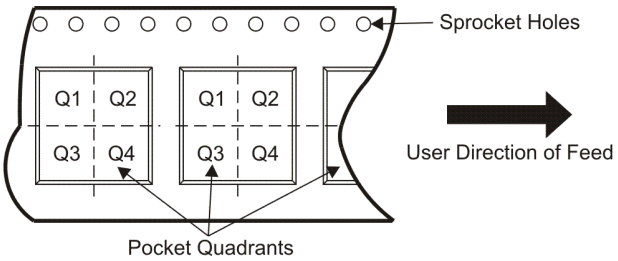

*All dimensions are nominal

Device	Package Type	Package Drawing	Pins	SPQ	Reel Diameter (mm)	Reel Width W1 (mm)	A0 (mm)	B0 (mm)	K0 (mm)	P1 (mm)	W (mm)	Pin1 Quadrant
SN65HVD05DR	SOIC	D	8	2500	330.0	12.4	6.4	5.2	2.1	8.0	12.0	Q1
SN65HVD06DR	SOIC	D	8	2500	330.0	12.4	6.4	5.2	2.1	8.0	12.0	Q1
SN65HVD07DR	SOIC	D	8	2500	330.0	12.4	6.4	5.2	2.1	8.0	12.0	Q1
SN75HVD06DR	SOIC	D	8	2500	330.0	12.4	6.4	5.2	2.1	8.0	12.0	Q1
SN75HVD07DR	SOIC	D	8	2500	330.0	12.4	6.4	5.2	2.1	8.0	12.0	Q1

PACKAGE MATERIALS INFORMATION

www.ti.com 13-Aug-2009

TAPE AND REEL BOX DIMENSIONS

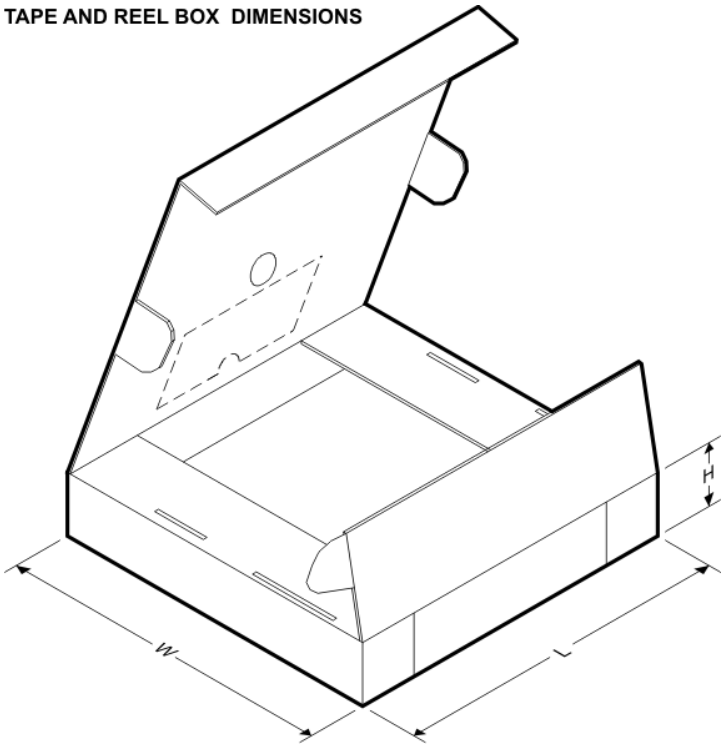

*All dimensions are nominal

Device	Package Type	Package Drawing	Pins	SPQ	Length (mm)	Width (mm)	Height (mm)
SN65HVD05DR	SOIC	D	8	2500	340.5	338.1	20.6
SN65HVD06DR	SOIC	D	8	2500	340.5	338.1	20.6
SN65HVD07DR	SOIC	D	8	2500	340.5	338.1	20.6
SN75HVD06DR	SOIC	D	8	2500	340.5	338.1	20.6
SN75HVD07DR	SOIC	D	8	2500	340.5	338.1	20.6

MECHANICAL DATA

P (R–PDIP–T8) PLASTIC DUAL–IN–LINE PACKAGE

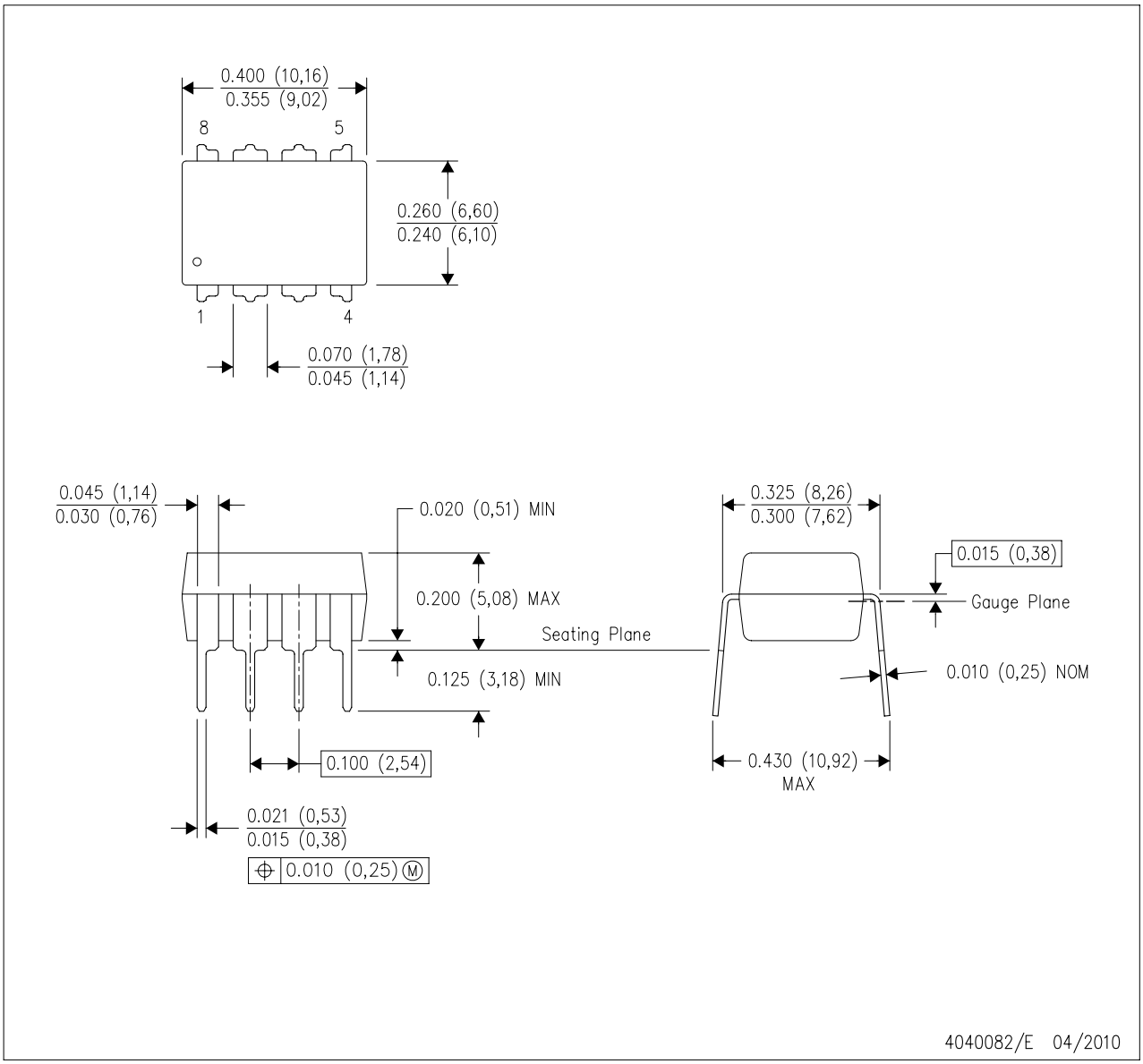

NOTES:
A. All linear dimensions are in inches (millimeters).
B. This drawing is subject to change without notice.
C. Falls within JEDEC MS–001 variation BA.

MECHANICAL DATA

D (R–PDSO–G8) PLASTIC SMALL OUTLINE

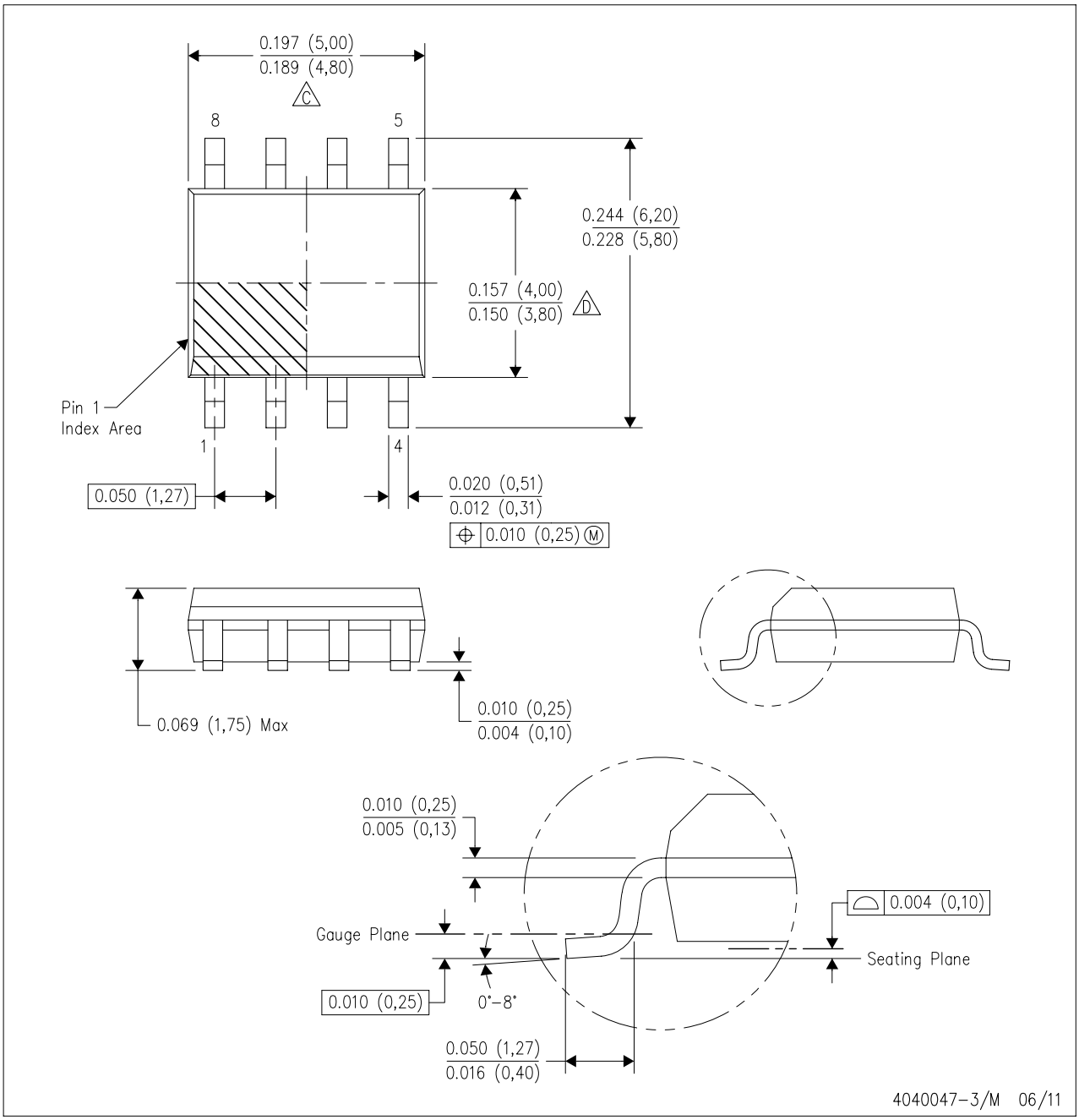

NOTES:
A. All linear dimensions are in inches (millimeters).
B. This drawing is subject to change without notice.
C. Body length does not include mold flash, protrusions, or gate burrs. Mold flash, protrusions, or gate burrs shall not exceed 0.006 (0,15) each side.
D. Body width does not include interlead flash. Interlead flash shall not exceed 0.017 (0,43) each side.
E. Reference JEDEC MS–012 variation AA.

IMPORTANT NOTICE

Texas Instruments Incorporated and its subsidiaries (TI) reserve the right to make corrections, enhancements, improvements and other changes to its semiconductor products and services per JESD46, latest issue, and to discontinue any product or service per JESD48, latest issue. Buyers should obtain the latest relevant information before placing orders and should verify that such information is current and complete. All semiconductor products (also referred to herein as “components”) are sold subject to TI’s terms and conditions of sale supplied at the time of order acknowledgment.

TI warrants performance of its components to the specifications applicable at the time of sale, in accordance with the warranty in TI’s terms and conditions of sale of semiconductor products. Testing and other quality control techniques are used to the extent TI deems necessary to support this warranty. Except where mandated by applicable law, testing of all parameters of each component is not necessarily performed.

TI assumes no liability for applications assistance or the design of Buyers’ products. Buyers are responsible for their products and applications using TI components. To minimize the risks associated with Buyers’ products and applications, Buyers should provide adequate design and operating safeguards.

TI does not warrant or represent that any license, either express or implied, is granted under any patent right, copyright, mask work right, or other intellectual property right relating to any combination, machine, or process in which TI components or services are used. Information published by TI regarding third-party products or services does not constitute a license to use such products or services or a warranty or endorsement thereof. Use of such information may require a license from a third party under the patents or other intellectual property of the third party, or a license from TI under the patents or other intellectual property of TI.

Reproduction of significant portions of TI information in TI data books or data sheets is permissible only if reproduction is without alteration and is accompanied by all associated warranties, conditions, limitations, and notices. TI is not responsible or liable for such altered documentation. Information of third parties may be subject to additional restrictions.

Resale of TI components or services with statements different from or beyond the parameters stated by TI for that component or service voids all express and any implied warranties for the associated TI component or service and is an unfair and deceptive business practice. TI is not responsible or liable for any such statements.

Buyer acknowledges and agrees that it is solely responsible for compliance with all legal, regulatory and safety-related requirements concerning its products, and any use of TI components in its applications, notwithstanding any applications-related information or support that may be provided by TI. Buyer represents and agrees that it has all the necessary expertise to create and implement safeguards which anticipate dangerous consequences of failures, monitor failures and their consequences, lessen the likelihood of failures that might cause harm and take appropriate remedial actions. Buyer will fully indemnify TI and its representatives against any damages arising out of the use of any TI components in safety-critical applications.

In some cases, TI components may be promoted specifically to facilitate safety-related applications. With such components, TI’s goal is to help enable customers to design and create their own end-product solutions that meet applicable functional safety standards and requirements. Nonetheless, such components are subject to these terms.

No TI components are authorized for use in FDA Class III (or similar life-critical medical equipment) unless authorized officers of the parties have executed a special agreement specifically governing such use.

Only those TI components which TI has specifically designated as military grade or “enhanced plastic” are designed and intended for use in military/aerospace applications or environments. Buyer acknowledges and agrees that any military or aerospace use of TI components which have ***not*** been so designated is solely at the Buyer's risk, and that Buyer is solely responsible for compliance with all legal and regulatory requirements in connection with such use.

TI has specifically designated certain components as meeting ISO/TS16949 requirements, mainly for automotive use. In any case of use of non-designated products, TI will not be responsible for any failure to meet ISO/TS16949.

Products		**Applications**	
Audio	www.ti.com/audio	Automotive and Transportation	www.ti.com/automotive
Amplifiers	amplifier.ti.com	Communications and Telecom	www.ti.com/communications
Data Converters	dataconverter.ti.com	Computers and Peripherals	www.ti.com/computers
DLP® Products	www.dlp.com	Consumer Electronics	www.ti.com/consumer-apps
DSP	dsp.ti.com	Energy and Lighting	www.ti.com/energy
Clocks and Timers	www.ti.com/clocks	Industrial	www.ti.com/industrial
Interface	interface.ti.com	Medical	www.ti.com/medical
Logic	logic.ti.com	Security	www.ti.com/security
Power Mgmt	power.ti.com	Space, Avionics and Defense	www.ti.com/space-avionics-defense
Microcontrollers	microcontroller.ti.com	Video and Imaging	www.ti.com/video
RFID	www.ti-rfid.com		
OMAP Applications Processors	www.ti.com/omap	**TI E2E Community**	e2e.ti.com
Wireless Connectivity	www.ti.com/wirelessconnectivity		

Mailing Address: Texas Instruments, Post Office Box 655303, Dallas, Texas 75265
Copyright © 2015, Texas Instruments Incorporated