Excellent Integrated System Limited

Stocking Distributor

Click to view price, real time Inventory, Delivery & Lifecycle Information:

Thomas Research Products
LOIRHB

For any questions, you can email us directly:
sales@integrated-circuit.com

Building Automation, Inc.

LightOWL Dual Technology Passive Infrared and Accoustic Sensors
LODT and LOIR

Installation and Setup Procedure

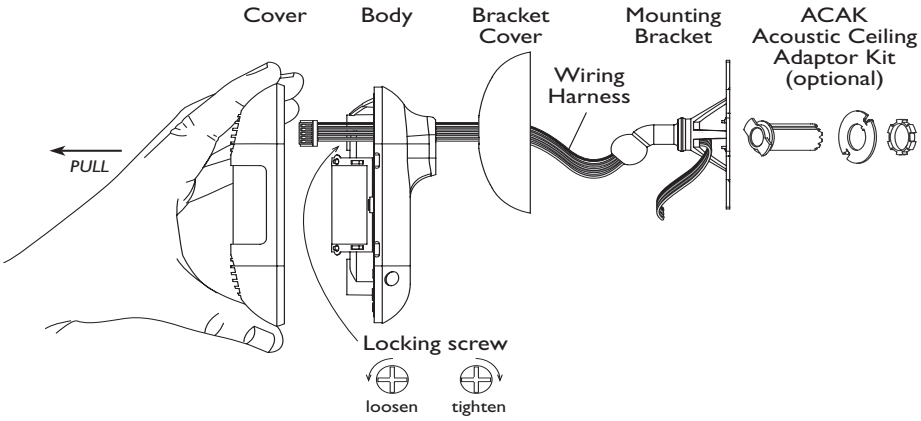

INSTALLATION

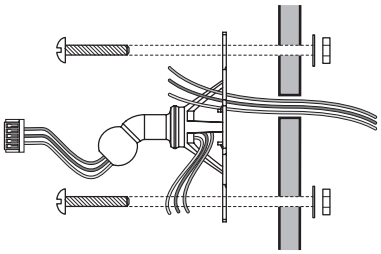

1. Insert wiring through bracket legs. Secure bracket to wall or ceiling. For ACAK Installation see page 2.

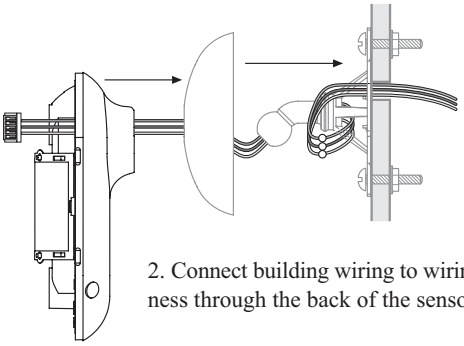

2. Connect building wiring to wiring harness with wire nuts. Snap bracket cover in place to conceal wiring and bracket. Feed wiring harness through the back of the sensor body and out exit slot.

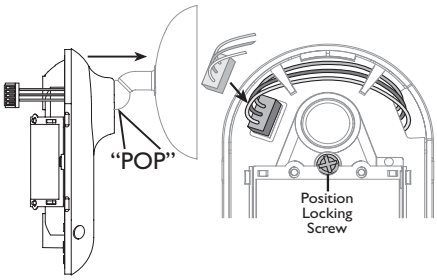

3. Snap sensor onto mounting post. Plug wiring harness into connector located on the left side opposite exit slot and place wiring under wire tabs. Align sensor and tighten position locking screw.

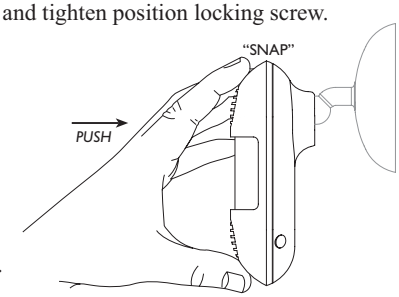

4. Replace sensor cover.

INSTALLATION OPTIONS

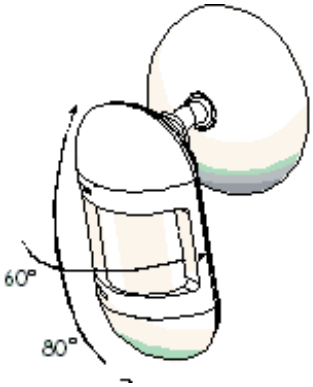

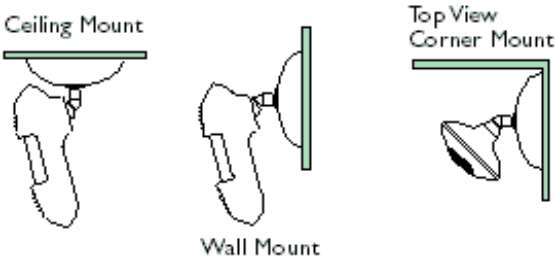

ACAK INSTALLATION (optional)

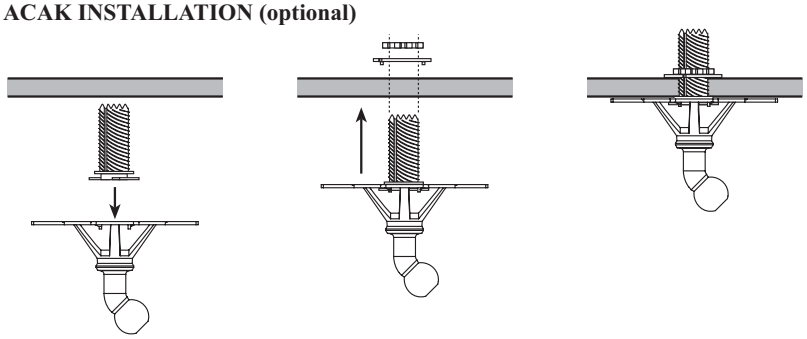

Insert ACAK into mounting bracket and twist clockwise 90° to lock in place. Screw bracket and self-cutting AKAC into ceiling tile and secure with washer and nut.

SENSOR PLACEMENT

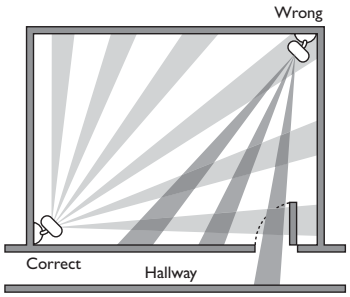

When placing the sensor in a room do not place where the sensor is aimed out through a door. The sensor can detect hallway traffic, forcing lights-on.

PHYSICAL WIRING

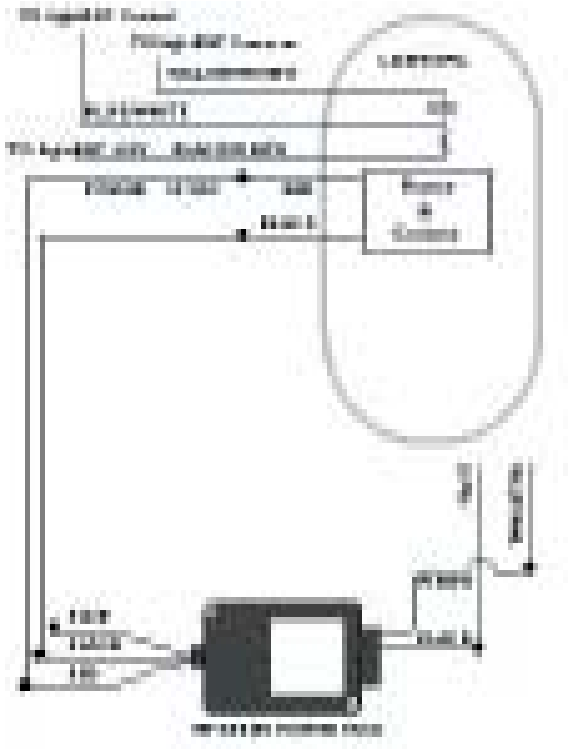

CONTROLS

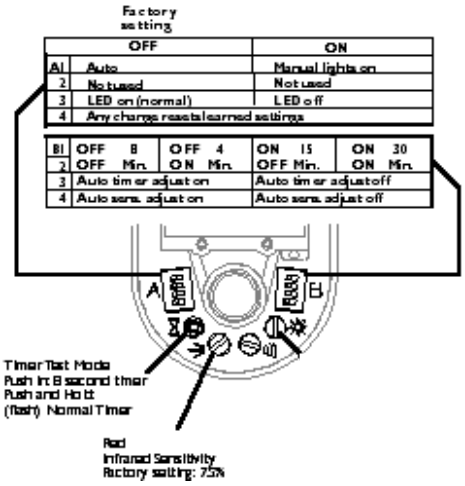

TROUBLE SHOOTING

Problem	Possible Cause	Test	Result
HID Lights Flash Bright-Dim-Bright	Control 'Floating'	Unplug all RJ-12 from Flashing Lamp	Replace Affected Cable
Lights Stay Dim	Low Voltage Shorted to +10V	Unplug all RJ-12 from Flashing Lamp	Replace Affected Cable
Lights Won't Dim	15.4 minute Warm Up	Wait 16 minutes	Normal Operation
Light Won't Dim	Common Shorted to Control	Remove all but One sensor from Control	Test One sensor at a time

HUBBELL Building Automation, Inc.

Hubbell Building Automation, Inc.
9601 Dessau Road • Building One • Suite 100 • Austin, Texas 78754
512-450-1100 • 512-450-1215 Fax
www.hubbell-automation.com