Excellent Integrated System Limited

Stocking Distributor

Click to view price, real time Inventory, Delivery & Lifecycle Information:

CUI Inc.
GA0771M

For any questions, you can email us directly:
sales@integrated-circuit.com

Distributor of CUI Inc.: Excellent Integrated System Limited
Datasheet of GA0771M - SPEAKER ALNICO 8OHM 1W 77MM RND
Contact us: sales@integrated-circuit.com Website: www.integrated-circuit.com
For more information, please visit the product page.

RoHS

Specifications

Nominal Size	77 mm (3.00 in)		(See attached drawing)	
Impedance	8 Ohm ± 15%		at	800 Hz 1 V
Resonant frequency	300 Hz ± 60 Hz		at	1 V
Sound pressure level	90 dB/w ± 3 dB		1 w 50 cm ave. at 1.5K, 2.0K, 2.5K, 3.0K Hz	
Response	Fo Hz ~ 20 KHz max 10 dB			
Input power	Nominal	1 W	Handling capacity	2 W
Operation	must be normal at program source 1 W			
Buzz, rattle, etc.	must be normal at sine wave 2.83 V			
Magnet	Size: 13 x 10 mm			
Load test	White noise	1 W	for	5 hours
Heat test	60 ± 2° C	20-50% R.H.		5 hours
Humidity test	40 ± 2° C	90-95% R.H.		5 hours

Frequency Response Curve

Potentiometer range	50 dB
Rectifier	RMS
Lower limit frequency	20 Hz
Wr. speed	100 mm/sec

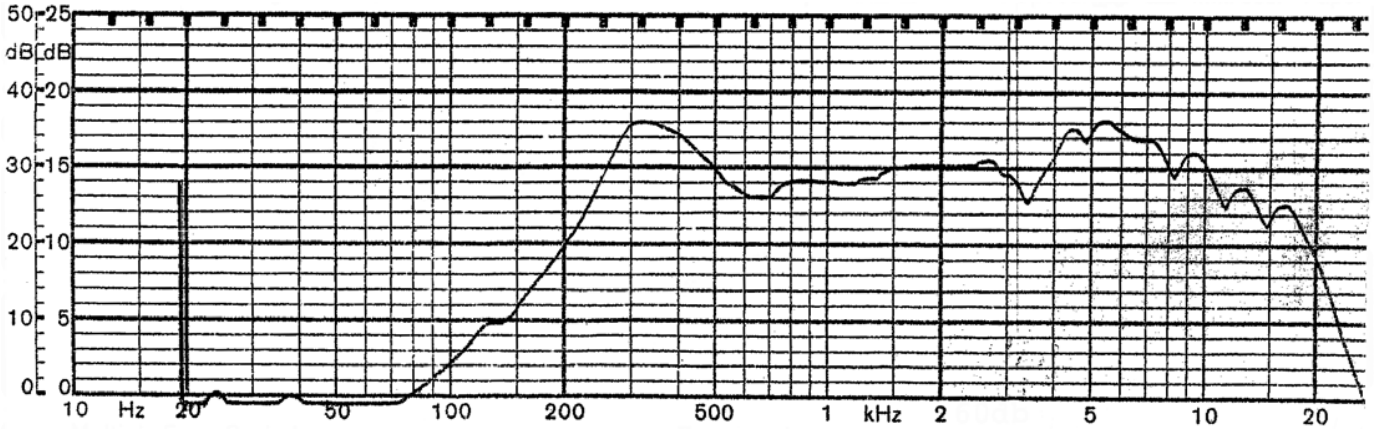

Zero level 60 dB

REV.	DESCRIPTION	DATE
A	NEW DRAWING	9/15/2006

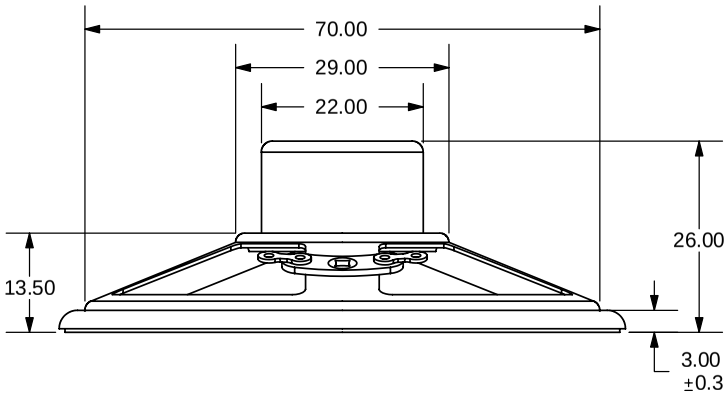

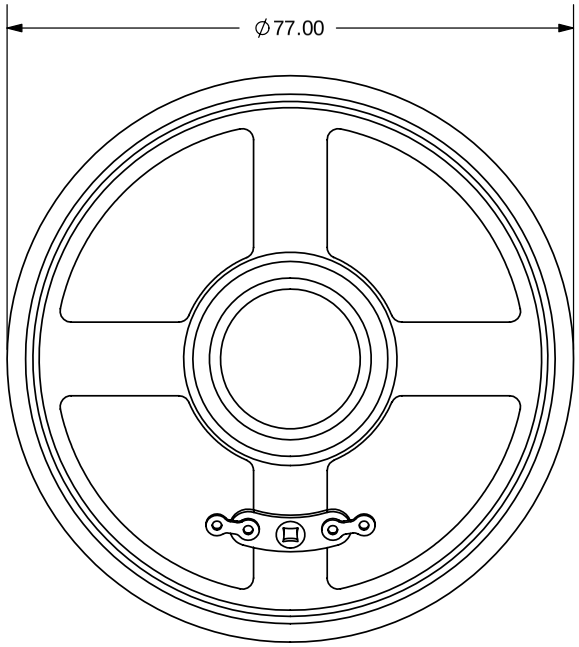

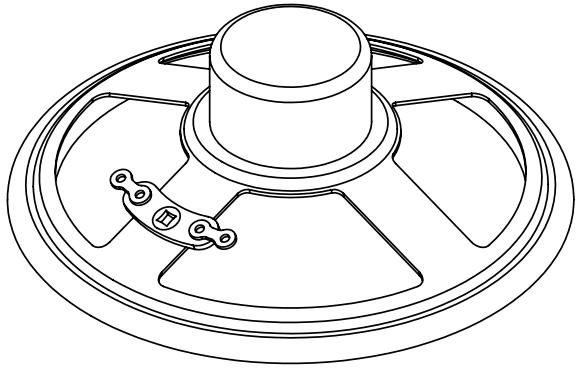

TOLERANCE:
±0.5mm UNLESS OTHERWISE SPECIFIED

RoHS

CUI INC

20050 SW 112th Ave.
Tualatin, OR 97062
Phone: 503-643-4899
800-275-4899
Fax: 503-372-1266
Website: www.cui.com

TITLE: Round frame mylar cone - alnico magnet	REV: A
PART NO. GA0771M	UNITS: MM [INCHES]
DRAWN BY: ZRJ	APPROVED BY:
	SCALE: 1:1

PC FILE NAME: GA0771M

COPYRIGHT 2006 BY CUI INC.

Distributor of CUI Inc.: Excellent Integrated System Limited
Datasheet of GA0771M - SPEAKER ALNICO 8OHM 1W 77MM RND
Contact us: sales@integrated-circuit.com Website: www.integrated-circuit.com
For more information, please visit the product page.