Excellent Integrated System Limited

Stocking Distributor

Click to view price, real time Inventory, Delivery & Lifecycle Information:

Molex Connector Corporation
0621001960

For any questions, you can email us directly:
sales@integrated-circuit.com

MiniDIMM Memory Card Insertion Tool

molex

Application Tooling Specification Sheet

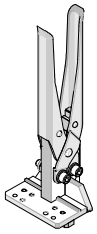

Order No. 62100-1960

FEATURES

- A pliers-type tool used to insert the memory card into the 78035 and 78359 series sockets
- Tool seats the memory card straight into the socket (no risk of "zippering" the contacts)
- Inserts 30mm wide or 18mm wide memory cards with one adjustment

SCOPE

Products: MiniDIMM 0.60mm Pitch DDR/DDR2/DDR3 Sockets, 200, 240, and 244 circuits, reverse angle, 22½° and 25°.

Product List

The following is a partial list of the product order numbers and their specifications this tool is designed to be used on. Updates to this list are available on www.molex.com.

Series No.	Circuit Size	Assembly Order Number					
78035	200	78035-0201	78035-0202				
	244	78035-0001	78035-0301	78035-6301			
78359	240	78359-0001	78359-0002	78359-0011	78359-0022	78359-0111	78359-0222

DESCRIPTION

The 62100-1960 MiniDIMM Memory Card Insertion Tool is a pliers-type tool for inserting a DDR/DDR2/DDR3 memory card into a card socket. The tool is approximately 200mm (8.0 in.) long by 50mm (2.0 in.) wide (closed) by 80mm (3.1 in.) thick and weighs 0.6 kg (1.3 lb).

OPERATING SPACE (Keep Out Zone)

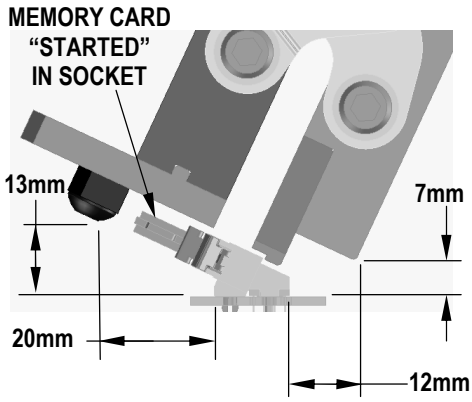

Figure 1
(SPACE REQUIRED FOR PLACING TOOL ON ASSEMBLY)

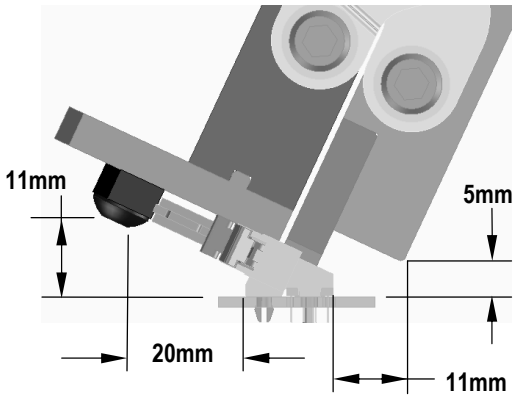

Figure 2
(SPACE REQUIRED WHEN MEMORY CARD IS FULLY INSERTED)

A certain amount of space is required around the memory card and card socket for the Insertion Tool to operate properly. Make sure there are no other components in this space. See Figure 1 and 2.

TOOL SETUP

This tool can insert 18mm and 30mm tall memory cards by adjusting the card backup bar. Remove the (2) M5 button head screws and move the bar to the outside set of holes for 30mm card height, or to the inside set of holes for 18mm card height. See Figure 3.

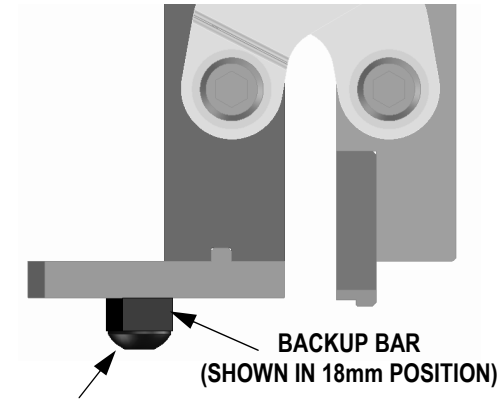

Figure 3

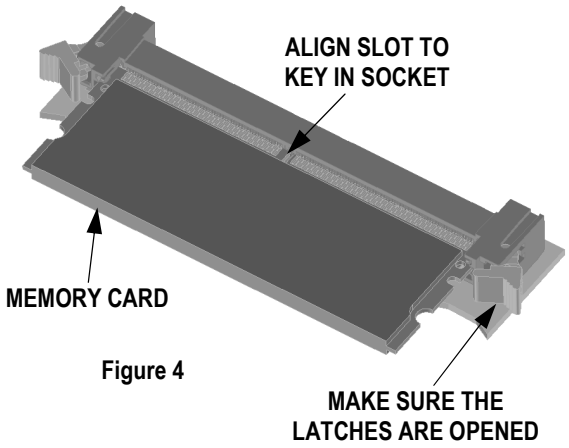

Figure 4

TOOL OPERATION

1. Make sure the latches are opened on the MiniDIMM socket.
2. By hand, start the memory card into the guide slots of the socket. Make sure the slot in the card aligns to the key in the socket. See Figure 4.
3. By hand, push the memory card up to the socket until it begins to engage the socket contacts.

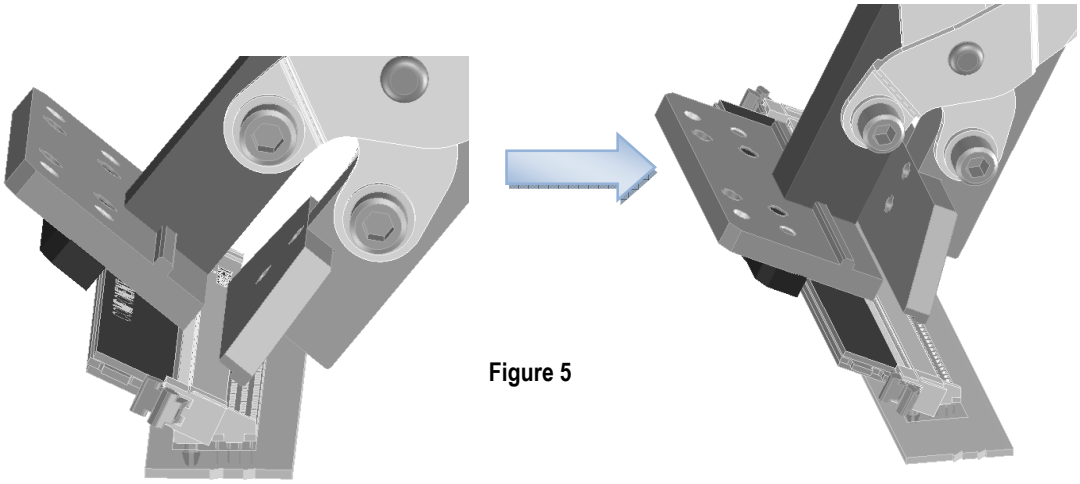

Figure 5

ENGAGE TOOL WITH BACK EDGE OF SOCKET

ROTATE TOOL DOWNWARD SO LONG LIP
IS BEHIND MEMORY CARD

4. Open the plier's jaws about 6mm (0.25 in.) so it will fit over the pre-loaded memory card.
5. The jaw with the short lip goes on the back edge of the MiniDIMM socket.
6. Place the tool on the back edge of the MiniDIMM socket, and then rotate the tool downward so the jaw with the long lip is behind the memory card. See Figure 5.
7. Slowly squeeze the tool handles together to insert the memory card.

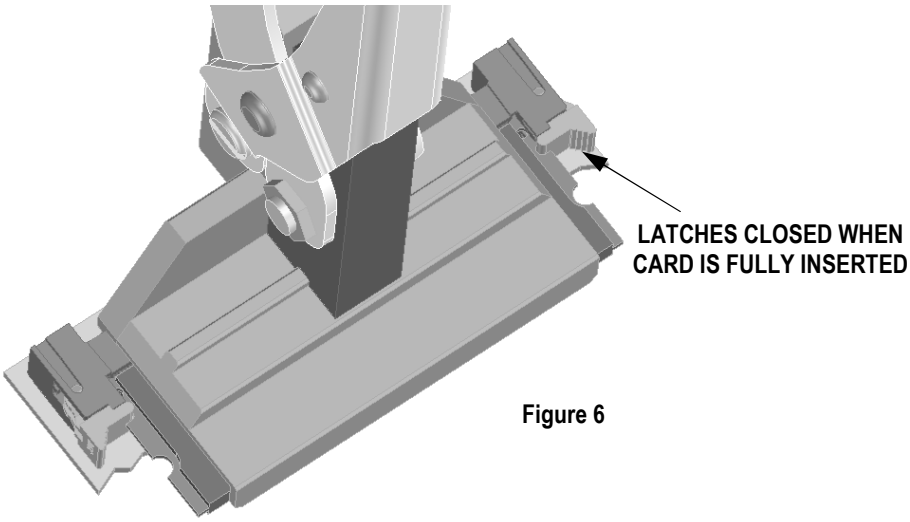

Figure 6

8. When the card is fully inserted the socket latches will be closed on the card. (DO NOT squeeze the tool handles beyond this condition.) See Figure 6.
9. Open the tool jaws slightly and remove the insertion tool from the assembly.

Maintenance

It is recommended that each operator of the tool be made aware of, and responsible for, the following maintenance steps:

1. Remove dust, moisture, and other contaminants with a clean brush, or soft, lint free cloth.
2. Do not use any abrasive materials that could damage the tool.
3. Make certain all pins; pivot points and bearing surfaces are protected with a thin coat of high quality machine oil. Do not oil excessively.
4. When tool is not in use, store in a clean, dry area.
5. There are no repair parts available for this tool. Should the tool be damaged a new tool is required.

CAUTION: Molex specifications are valid only when used with Molex connectors and tooling.

Visit our Web site at http://www.molex.com