Excellent Integrated System Limited

Stocking Distributor

Click to view price, real time Inventory, Delivery & Lifecycle Information:

Knowles
5100-253604

For any questions, you can email us directly:
sales@integrated-circuit.com

NOTES:
1. COIL WOUND USING COPPER MAGNET WIRE WITH CLASS 155 SINGLE BUILD POLYURETHANE INSULATION.
2. FINISH WIRE ON COIL IS SECURED WITH BLUE DOT OF PAINT.
3. BOBBIN IS FULLY ANNEALED HYMU80 WITH PARYLENE COATING.
4. WITH A POSITIVE DC VOLTAGE APPLIED TO THE "FINISH" WIRE,THE MAGNETIC FIELD WILL ATTRACT A COMPASS NEEDLE AS SHOWN.
5. START AND FINISH WIRE TO LIE TIGHT AGAINST COIL.
6. COIL TO BE DIPPED AT LEAST 2 TIMES WITH 13-863 (CONATHANE CE-1164) TO PROVIDE A UNIFORM LAYER OF PROTECTION ON COIL WIRES. BEFORE TUBING IS APPLIED TO COIL.
7. MISALIGNMENT OF TERMINALS LEADS CANNOT EXCEED 22.5°
8. START AND FINISH WIRE MUST CROSS OVER THE FLANGE IN THE 40° SECTIONS SHOWN. THE START AND FINISH WIRES CANNOT BE WITHIN 5° OF THE TERMINALS.
9. SENSITIVITY MEASUREMENT IN dB re 1.0 VOLT WITH A MAGNETIC FIELD STRENGTH OF 1 A/M APPLIED TO THE COIL, LONG AXIS OF THE TELECOIL IS PARALLEL TO THE TEST MAGNETIC FIELD.
10. SOLDER SHALL NOT CONTAIN LEAD. MUST BE ROHS COMPLIANT.

ELECTRICAL CHARACTERISTICS

# OF TURNS	WIRE SIZE	INDUCTANCE @ 1KHZ (mH)±15%	DCR@25°C (ohms)±10%	SENSITIVE @ 1KHZ (dB) ±2dB	w/10k Ω LOAD
4700	51H HIGH RESISTANCE	142	900	-59.5	-60.5

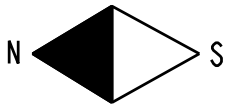

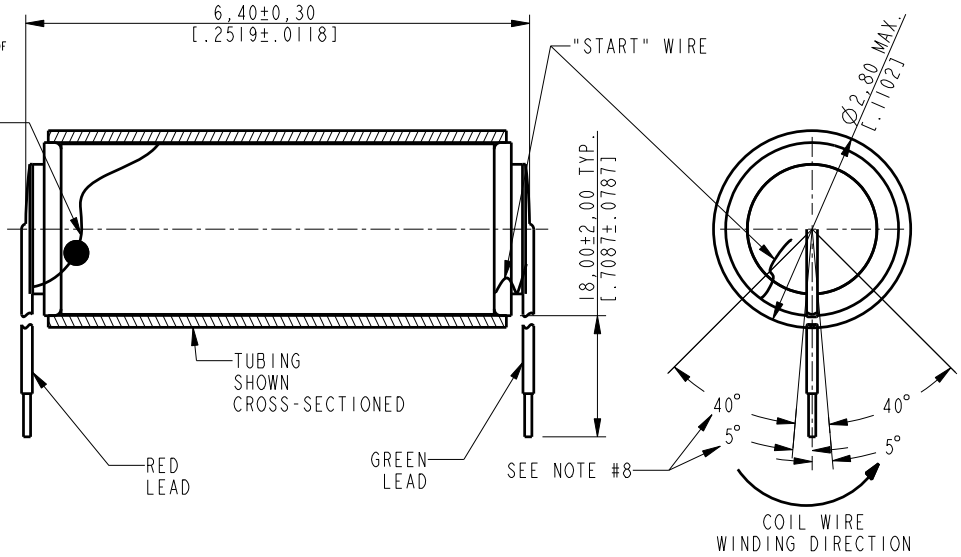

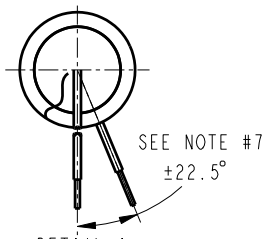

DETAIL A
SCALE 10:1

REV.	CHANGE #	DATE	NAME
C	C10110669	1-7-10	SDZ
B	C10104995	11/03/06	BCS
A	C10103768	01/12/06	BCS

SCALE: 15:1

FUNDAMENTAL TOLERANCE: ± 0,03 [0.001]

ANGLE TOLERANCE: ± 1°

MISMATCH TOLERANCE: ± 0,03 [0.001]

	DATE	NAME
DESIGNED	01/10/06	BCS
CHECKED	01/10/06	BCS
RELEASED	01/10/06	TDS

MATERIAL:

HEAT TREATMENT:

FINISH:

TITLE: **FINISHED 01 STYLE BOBBIN W/2 TERMINAL PADS**

PROPRIETARY NOTE: THIS DOCUMENT CONTAINS INFORMATION WHICH IS THE PROPRIETARY PROPERTY OF KNOWLES ELECTRONICS, LLC. OR ITS AFFILIATED ENTITIES. IT IS ISSUED IN STRICT CONFIDENCE AND SHALL NOT BE REPRODUCED, COPIED, USED, OR DISCLOSED TO ANY THIRD PARTY PARTIALLY OR WHOLLY IN ANY MANNER WITHOUT PRIOR WRITTEN PERMISSION OF, AND MUST BE RETURNED UPON REQUEST BY, KNOWLES ELECTRONICS, LLC.

KNOWLES

RELEASED LEVEL: Active

DRAWING NUMBER: 5100-253604

REVISION: C

SHEETS: 1 of 1