Excellent Integrated System Limited

Stocking Distributor

Click to view price, real time Inventory, Delivery & Lifecycle Information:

Triad Magnetics
FD8-12

For any questions, you can email us directly:
sales@integrated-circuit.com

Power Transformer
Chassis Mount: Quick Pack

FD8-12

Description:
The FD8-12 Quick Pack small power transformer offers a significant reduction in size and weight over a standard transformer. This transformer can be used for a wide variety of applications. It is bobbin wound for reduced size and small operating space.

Electrical Specifications (@25C):
Maximum Power: 100.0VA
Input Voltage:
Series: 230VAC@50/60Hz
Parallel: 115VAC@50/60Hz
Output Voltage: 12.6VCT@8.0A
Hipot: 2500VAC primary to secondary; 1500VAC windings to core.

Construction:
Split bobbin non concentric winding eliminates costly electrostatic shielding.
Termination is suitable for quick connects or soldering.
Built with UL Class B Insulation System.

Safety:
UL: File E53148, UL 5085-1 and 2 (formerly UL 506), General Purpose.

Dimensions:

A	B	C	D	E	F	G
2.562	3.562	4.031	2.250	3.062	.187 Dia	1.312

Notes: 1. Units: inches.
2. Terminal size: .187” X 0.021”.
3. Weight: 2.75 lbs

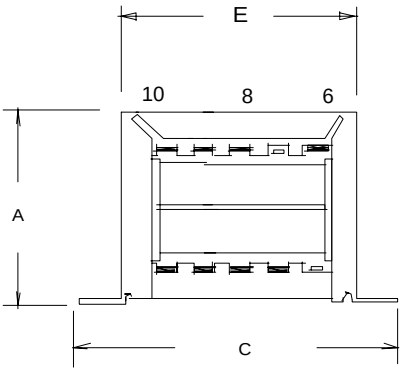

Schematic:

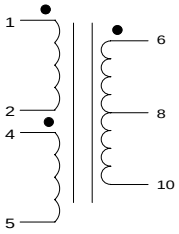

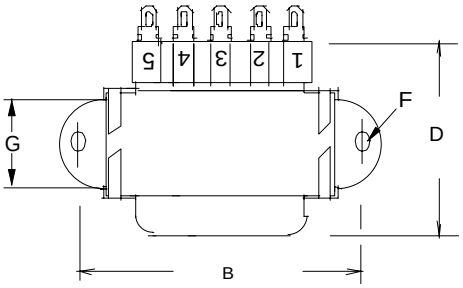

Input (115V): Input 1 & 2
Connect 1&4, 2&5
Input (230V): Input 1 & 5
Connect 2&4

Output: 6 & 10

RoHS Compliance: As of manufacturing date February 2005, all standard products meet the requirements of 2011/65/EU, known as the RoHS initiative..

* Upon printing, this document is considered “uncontrolled”. Please contact Triad Magnetics’ website for the most current version.

Web: www.TriadMagnetics.com
Phone 951-277-0757
Fax 951-277-2757

460 Harley Knox Blvd.
Perris, California 92571

Publish Date: December 4, 2013