Excellent Integrated System Limited

Stocking Distributor

Click to view price, real time Inventory, Delivery & Lifecycle Information:

E-Switch
KO130AA126

For any questions, you can email us directly:
sales@integrated-circuit.com

SHEET 1 OF 1

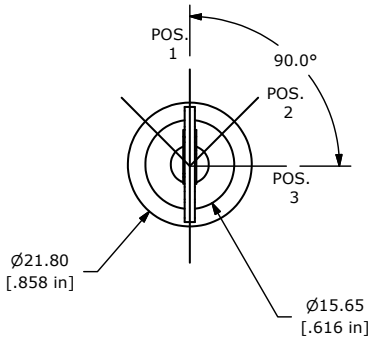

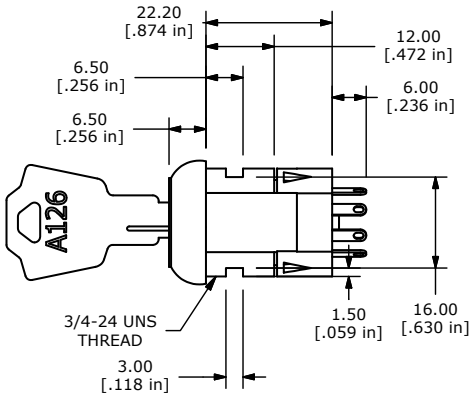

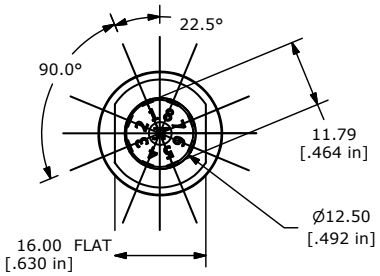

CIRCUIT: SP (45°/45° INDEXING)
CONTACT CONFIGURATION

SWITCH FUNCTION		
CONNECTED TERMINAL #		
POS. 1	POS. 2	POS. 3
8-1	1-2	2-3

LEGEND

● = DETENT POSITIONS
◉ = KEY PULL POSSIBLE IN THESE POSITIONS

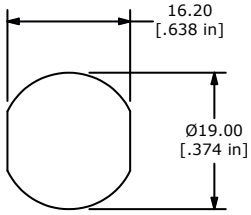

RECOMENDED PANEL CUTOUT

NOTES:
1. ALL DIMENSIONS IN MM [INCH]
2. GENERAL TOLERANCE: X.X=±0.4
   X.XX=±0.25
3. TERM. NOS. FOR REF. ONLY
4. CONTACT RATING: 4A @125VAC/28VDC, 2A @250VAC
5. DIELECTRI STRENGTH: 1KV RMS min. AT SEA LEVEL
6. ELECTRICAL LIFE: 10,000 MAKE-AND-BREAK CYCLES AT FULL LOAD.
7. KEYCODE: A126

REV	PCR NO	DESCRIPTION	DATE	BY
B	21651	REDRAWN INTO INVENTOR FORMAT	10/22/14	AS

THE INFORMATION CONTAINED IN THIS DOCUMENT IS PROPRIETARY TO E-SWITCH AND IS NOT TO BE COPIED OR TRANSFERRED

E•SWITCH®

TITLE KO130A

SCALE	DATE	DR	DWG	REV
1:1	10/21/2014	AS	K200210	B