Murata Power Solutions

MGJ3 Series

5.2kVDC Isolated 3W Gate Drive SM DC/DC Converters

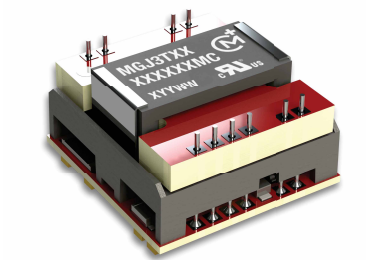

FEATURES

- No opto feedback
- Patents Pending
- Optimised bipolar output voltages for IGBT/ SiC & Mosfet gate drives
- Configurable dual outputs for all gate drive applications: +15V/-5V, +15V/-10V & +20V/-5V outputs
- Reinforced insulation to UL60950 recognized
- ANSI/AAMI ES60601-1 recognition pending
- Characterised dv/dt immunity 80kV/µs at 1.6kV
- Characterised partial discharge performance
- 5.2kVDC isolation test voltage 'Hi Pot Test'
- Ultra low coupling capacitance 15pF
- DC link voltage 3kVDC
- 5V, 12V & 24V input voltages
- 105°C operating temperature

PRODUCT OVERVIEW

Offering configurable dual output voltages of +15V/-10V, +20V/-5V and +15V/-5V, the MGJ3 series of DC-DC converters is ideal for powering 'high side' and 'low side' gate drive circuits for IGBTs, Silicon and Silicon Carbide Mosfets in bridge circuits. A choice of asymmetric output voltages allows optimum drive levels for best system efficiency and EMI. The MGJ3 series is characterised for high isolation and dv/dt requirements commonly seen in bridge circuits used in motor drives and inverters. A disable/frequency synchronisation pin simplifies EMC filter design. The MGJ3 protection features include short circuit protection and overload protection.

RoHS COMPLIANT

25 For full details go to www.murata-ps.com/rohs

c UL us

SELECTION GUIDE

Order Code[1]	Input Voltage Range	Typical Application	Output 1			Output 2		
			Rated Output Voltage	Rated Output Current	Output Power	Rated Output Voltage	Rated Output Current	Output Power
	V	See page 3	V	mA	W	V	mA	W
MGJ3T05150505MC	4.5 - 9	IGBT	+15	120	1.8	-10	120	1.2
MGJ3T12150505MC	9 - 18	IGBT	+15	120	1.8	-10	120	1.2
MGJ3T24150505MC	18 - 36	IGBT	+15	120	1.8	-10	120	1.2
MGJ3T05150505MC	4.5 - 9	SiC	+20	120	2.4	-5	120	0.6
MGJ3T12150505MC	9 - 18	SiC	+20	120	2.4	-5	120	0.6
MGJ3T24150505MC	18 - 36	SiC	+20	120	2.4	-5	120	0.6
MGJ3T05150505MC	4.5 - 9	MOSFET	+15	150	2.25	-5	150	0.75
MGJ3T12150505MC	9 - 18	MOSFET	+15	150	2.25	-5	150	0.75
MGJ3T24150505MC	18 - 36	MOSFET	+15	150	2.25	-5	150	0.75

SELECTION GUIDE (Continued)

Order Code[1]	Input Voltage Range	Typical Application	Output 1				Output 2			
			Load Regulation (Typ)[3]	Load Regulation (Max)[3]	Ripple & Noise (Typ)[2]	Ripple & Noise (Max)[2]	Load Regulation (Typ)[3]	Load Regulation (Max)[3]	Ripple & Noise (Typ)[2]	Ripple & Noise (Max)[2]
	V	See page 3	%		mVp-p		%		mVp-p	
MGJ3T05150505MC	4.5 - 9	IGBT	3	10	69	200	3	10	98	150
MGJ3T12150505MC	9 - 18	IGBT	3	10	85	200	3	10	108	150
MGJ3T24150505MC	18 - 36	IGBT	3	10	83	200	3	10	104	150
MGJ3T05150505MC	4.5 - 9	SiC	3	10	118	275	3	10	49	75
MGJ3T12150505MC	9 - 18	SiC	3	10	139	275	3	10	54	75
MGJ3T24150505MC	18 - 36	SiC	3	10	135	275	3	10	52	75
MGJ3T05150505MC	4.5 - 9	MOSFET	3	10	69	200	3	10	49	75
MGJ3T12150505MC	9 - 18	MOSFET	3	10	85	200	3	10	54	75
MGJ3T24150505MC	18 - 36	MOSFET	3	10	83	200	3	10	52	75

1. Components are supplied in tape and reel packaging, please refer to package specification section. Orderable part numbers are MGJ3T05150505MC-R7 (23 pieces per reel), or MGJ3T05150505MC-R13 (92 pieces per reel).
2. See ripple & noise test method.
3. Between 75% and 100% rated output current.

All specifications typical at T_A=25°C, nominal input voltage and rated output current unless otherwise specified.

SELECTION GUIDE (Continued)

Order Code	Nominal Input Voltage	Input Current at Rated Load	Efficiency (Min)	Efficiency (Typ)	Isolation Capacitance	MTTF[1]	
						MIL 217	Telecordia
	V	mA	%		pF	kHrs	
MGJ3T05150505MC	5	760	75	78.5	15	889	6662
MGJ3T12150505MC	12	310	78	82	15	939	6596
MGJ3T24150505MC	24	155	77	81	15	915	6596

INPUT CHARACTERISTICS

Parameter	Conditions	Min.	Typ.	Max.	Units
Voltage range	5V input types	4.5	5	9	V
	12V input types	9	12	18	
	24V input types	18	24	36	
Under voltage lock out	Turn on threshold MGJ3T05		4.1		V
	Turn off threshold MGJ3T05		3.0		
	Turn on threshold MGJ3T12		8.1		
	Turn off threshold MGJ3T12		7.5		
	Turn on threshold MGJ3T24		16.7		
	Turn off threshold MGJ3T24		16.1		
Input ripple current	5V input types		18		mA p-p
	12V input types		12		
	24V input types		9		

OUTPUT CHARACTERISTICS

Parameter	Conditions	Min.	Typ.	Max.	Units
Minimum load	Below 10% load, 5V and 15V outputs are clamped to 6V and 16V respectively	10			%
Voltage set point accuracy	Nominal output voltages are at 75% loading		±4		%
Line regulation	Low line to high line			2	%
Transient response	Peak deviation (50-100% & 100-50% load swing)		1.2		$\%V_{out}$
	Settling time		0.25		ms

ISOLATION CHARACTERISTICS

Parameter	Conditions	Min.	Typ.	Max.	Units
Isolation test voltage	Flash tested for 1 second	5200			VDC
Resistance	Viso = 1kVDC	100			GΩ
Continuous barrier withstand voltage	Non-safety barrier application			3000	V

GENERAL CHARACTERISTICS

Parameter	Conditions	Min.	Typ.	Max.	Units
Switching frequency			100		kHz

TEMPERATURE CHARACTERISTICS

Parameter	Conditions	Min.	Typ.	Max.	Units
Operation	See derating graphs	-40		105	°C
Storage		-50		125	
Product temperature rise above ambient	100% Load, Nom V_{IN}, Still Air		18		

ABSOLUTE MAXIMUM RATINGS

Short-circuit protection	Continuous
Input voltage, MGJ3 5V input types	12V
Input voltage, MGJ3 12V input types	20V
Input voltage, MGJ3 24V input types	40V

1. Calculated using MIL-HDBK-217 FN2 and Telecordia SR-332 calculation model with nominal input voltage at full load.

APPLICATION NOTES

Start-up times

Typical start up times for this series, with no additional output capacitance are:

Part No.	Start-up times
	ms
MGJ3T05150505MC	15
MGJ3T12150505MC	15
MGJ3T24150505MC	15

Output capacitance must not exceed:

Output Voltage	Maximum output capacitance
V	µF
15	120
5	220

Disable/Frequency synchronisation

Please refer to application notes for further information.

		Min	Typ	Max	Units
Disable/Synch[1]	Pull Down Current		0.5		mA
	Input High	2		5	V
	Input Low	0		0.8	V
Synchronisation	Frequency Range	90	100	110	kHz
	Duty Cycle	25		75	%

1. Disable/Synch pin is active low.

Output configurations for power switches

Terminal	IGBT	SIC	MOSFET
(P10) 15V Output	+15V 0.12A	+20V 0.12A	+15V 0.15A
(P9) 15V Return 5VA Output	0V	No connection	0V
(P7) 5VA Return 5VB Output	No connection	0V	-5V 0.15A
(P8) 5VB Return	-10V 0.12A	-5V 0.12A	No connection

APPLICATION NOTES (Continued)

Schematic for driving IGBT, SiC & MOSFET

MGJ DC-DC CONNECTIONS FOR DRIVING IGBT DEVICES

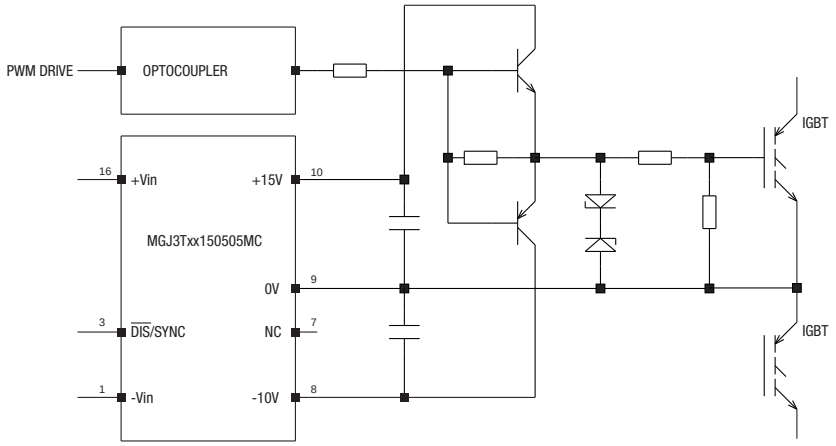

MGJ DC-DC CONNECTIONS FOR DRIVING SiC DEVICES

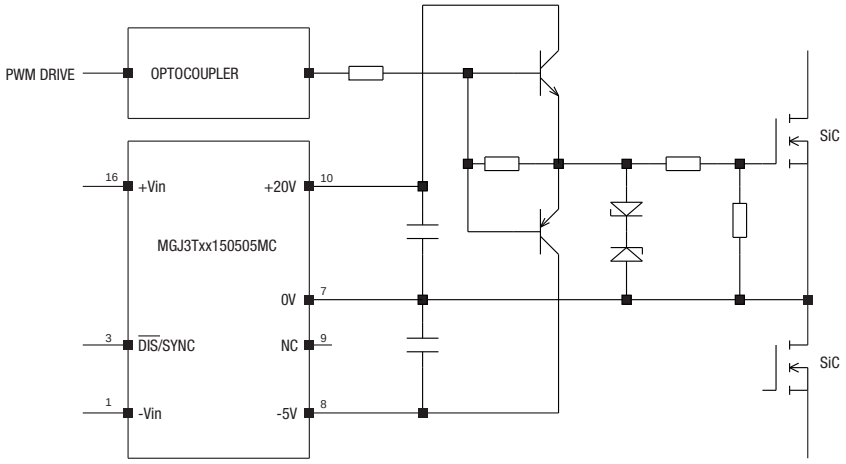

MGJ DC-DC CONNECTIONS FOR DRIVING MOSFET DEVICES

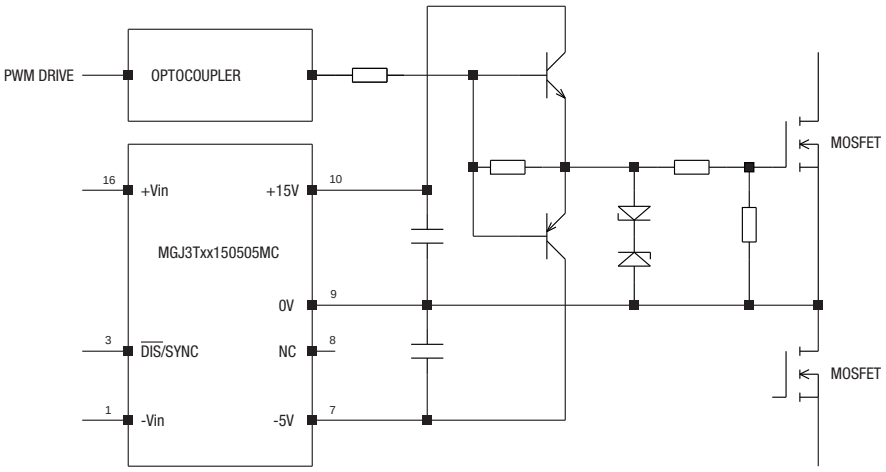

TECHNICAL NOTES

ISOLATION VOLTAGE

'Hi Pot Test', 'Flash Tested', 'Withstand Voltage', 'Proof Voltage', 'Dielectric Withstand Voltage' & 'Isolation Test Voltage' are all terms that relate to the same thing, a test voltage, applied for a specified time, across a component designed to provide electrical isolation, to verify the integrity of that isolation.

Murata Power Solutions MGJ3 series of DC/DC converters are all 100% production tested at their stated isolation voltage. This is 5.2kVDC for 1 second.

A question commonly asked is, "What is the continuous voltage that can be applied across the part in normal operation?"

When the insulation in the MGJ3 series is not used as a safety barrier , i.e. provides functional isolation only, continuous or switched voltages across the barrier up to 3kV are sustainable. Long term reliability testing at these voltages continues. Peak Inception voltages measured were in excess of 3.5kV when testing for partial discharge in accordance with IEC 60270. Please contact Murata for further information.

The MGJ3 series has been recognized by Underwiters Laboratory to 250 Vrms Reinforced Insulation, please see safety approval section below.

REPEATED HIGH-VOLTAGE ISOLATION TESTING

It is well known that repeated high-voltage isolation testing of a barrier component can actually degrade isolation capability, to a lesser or greater degree depending on materials, construction and environment. We therefore strongly advise against repeated high voltage isolation testing, but if it is absolutely required, that the voltage be reduced by 20% from specified test voltage.

SAFETY APPROVAL

ANSI/AAMI ES60601-1

The MGJ3 series is pending recognition ANSI/AAMI ES60601-1.

UL 60950

The MGJ3 series has been recognized by Underwriters Laboratory (UL) to UL 60950 for reinforced insulation to a working voltage of 250Vrms with a maximum measured product operating temperature of 105°C.

Creepage and clearance 7mm.

FUSING

The MGJ3 Series of converters are not internally fused so to meet the requirements of UL an anti-surge input line fuse should always be used with ratings as defined below.
Input Voltage, 5V 2A
Input Voltage, 12V 1A
Input Voltage, 24V 0.5A
All fuses should be UL recognized, 125V rated.

CHARACTERISATION TEST METHODS

Ripple & Noise Characterisation Method

Ripple and noise measurements are performed with the following test configuration.

C1	1µF X7R multilayer ceramic capacitor, voltage rating to be a minimum of 3 times the output voltage of the DC/DC converter
C2	10µF tantalum capacitor, voltage rating to be a minimum of 1.5 times the output voltage of the DC/DC converter with an ESR of less than 100mΩ at 100 kHz
C3	100nF multilayer ceramic capacitor, general purpose
R1	450Ω resistor, carbon film, ±1% tolerance
R2	50Ω BNC termination
T1	3T of the coax cable through a ferrite toroid
RLOAD	Resistive load to the maximum power rating of the DC/DC converter. Connections should be made via twisted wires
Measured values are multiplied by 10 to obtain the specified values.	

Differential Mode Noise Test Schematic

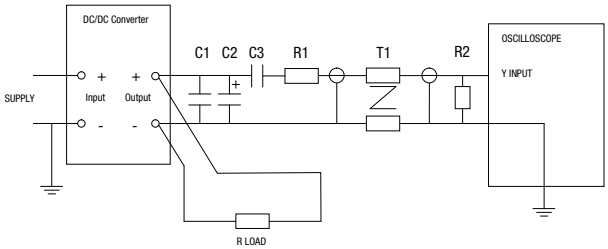

RoHS COMPLIANCE, MSL AND PSL INFORMATION

This series is compatible with RoHS soldering systems with a peak reflow solder temperature of 245ºC and Time Above Liquidus for 90 seconds. as per J-STD-020D.1. The pin termination finish on this product series is Gold with Nickel Pre-plate. The series is backward compatible with Sn/Pb soldering systems. The series has a Moisture Sensitivity Level (MSL) 1. Samples of the product series were tested in accordance with the conditioning described for MSL level 1 in IPS/J-STD-020D.1. The product series passed electrical tests, co-planarity and visual inspection criteria.

EFFICIENCY VS LOAD

MGJ3T05150505MC

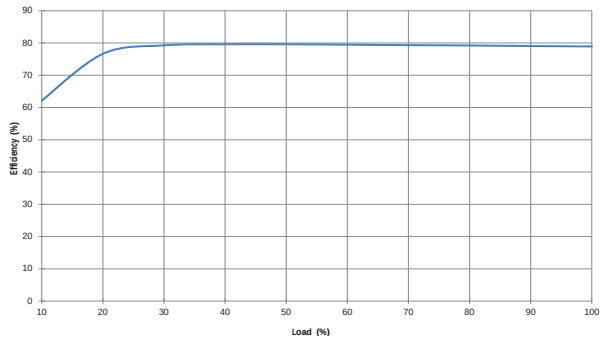

MGJ3T12150505MC

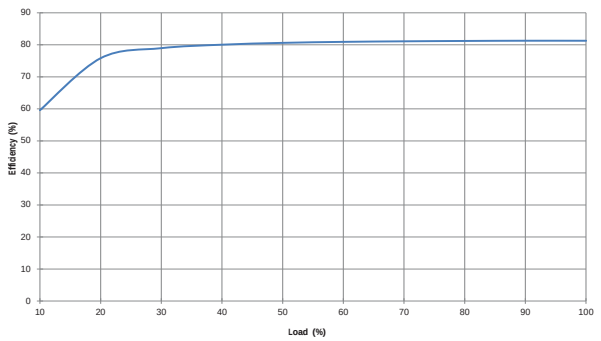

MGJ3T24150505MC

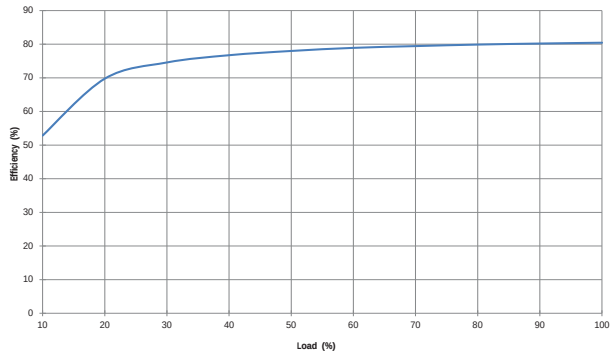

DERATING GRAPHS

Derating curves are based on IPC-9592. With no derating some components may be operating at the manufacturers maximum temperature ratings.

MGJ3T05150505MC

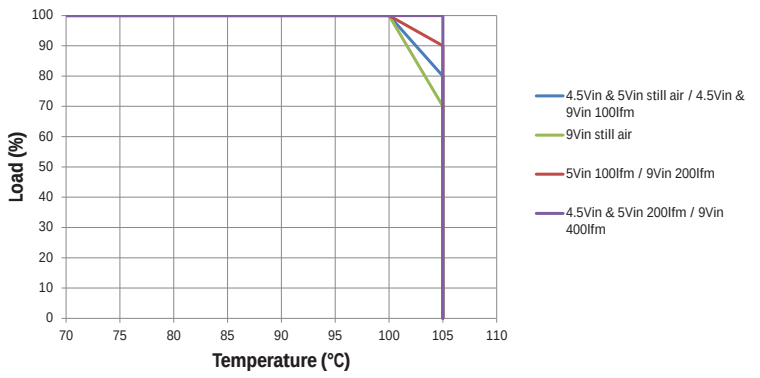

MGJ3T12150505MC

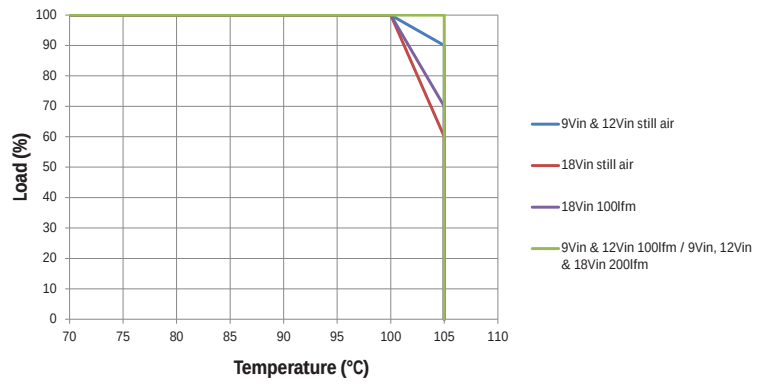

MGJ3T24150505MC

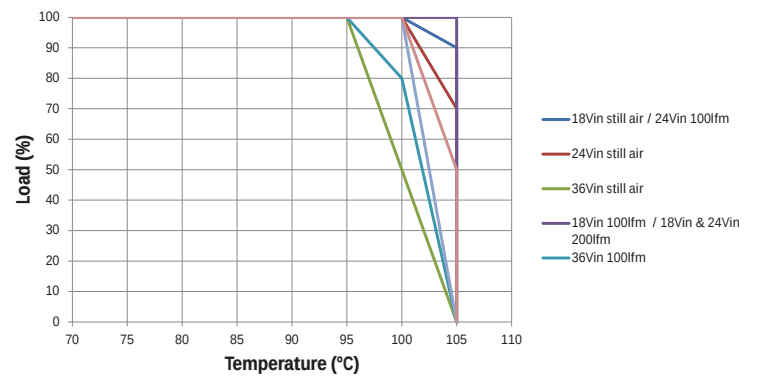

EMC FILTERING AND SPECTRA

FILTERING

The following filter circuit and filter table shows the input filters typically required to meet EN55022 Quasi-PeakCurve A or B.

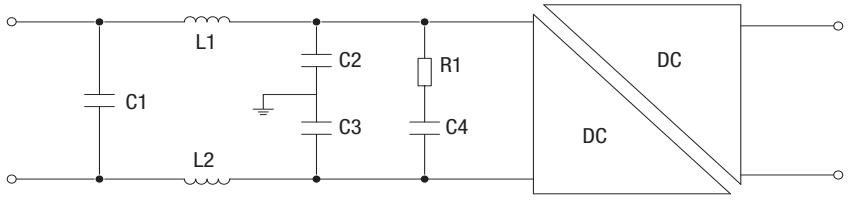

C1, C2 & C3 Polyester or ceramic capacitor

C4 Electrolytic capacitor (note R1 could be omitted if C4 has ESR >= R1)

TO MEET CURVE B							
Part Number	C1	L1	L2	C2	C3	R1	C4
MGJ3T05150505MC	1.5µF	476R8SC		10nF	10nF	500mΩ	220µF
MGJ3T12150505MC	1.5µF	476R8SC		10nF	10nF	500mΩ	220µF
MGJ3T24150505MC	1.5µF	476R8SC		10nF	10nF	500mΩ	220µF

MGJ3T05150505MC

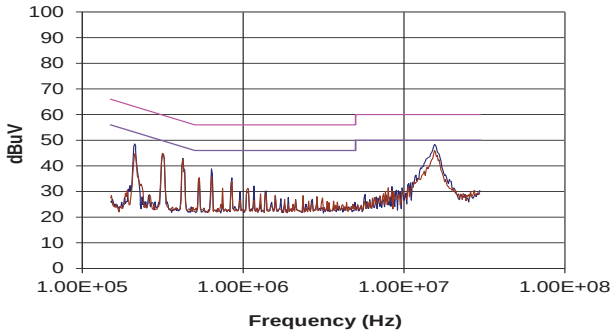

MGJ3T12150505MC

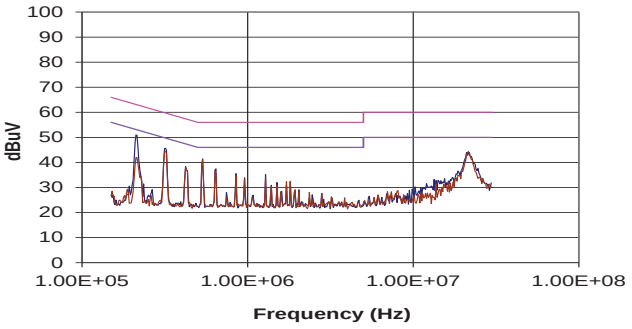

MGJ3T24150505MC

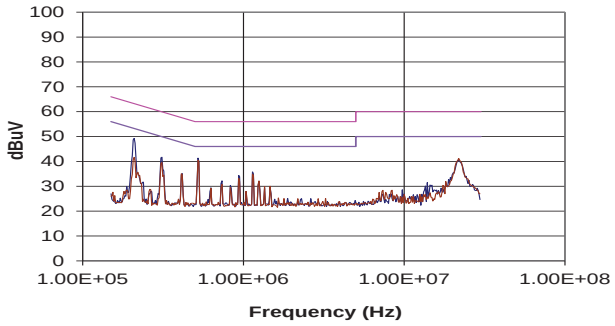

PACKAGE SPECIFICATIONS

MECHANICAL DIMENSIONS

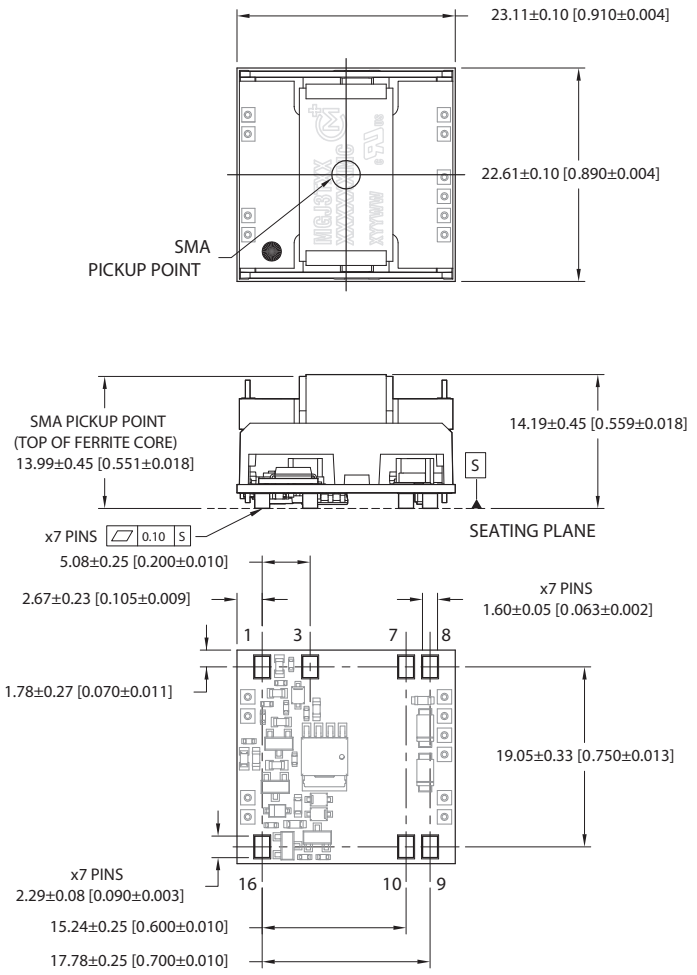

All dimensions in mm (inches), Controlling dimensions is mm.
Tolerance (unless otherwise stated) ±0.25 (0.010).

Weight: 10.70 g

PIN CONNECTIONS

Pin	Function
1	-Vin
3	$\overline{\text{Dis}}$/Sync
7	5VA RTN
	5VB
8	5VB RTN
9	15V RTN
	5VA
10	15 Vout
16	+Vin

RECOMMENDED FOOTPRINT DETAILS

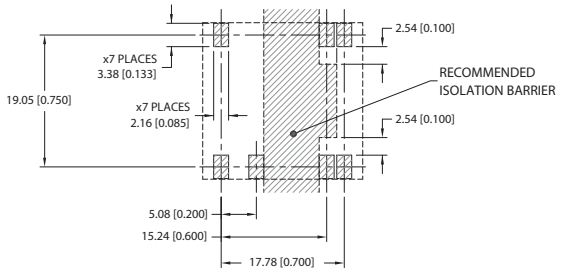

TAPE & REEL SPECIFICATIONS

REEL OUTLINE DIMENSIONS

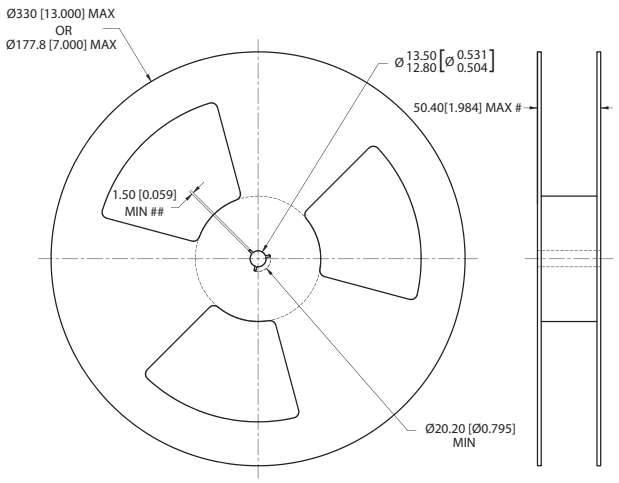

Tape & Reel specifications shall conform with current EIA-481 standard
Unless otherwise stated all dimensions in mm(inches)
Controlling dimension is mm
Measured at hub
Six equi-spaced slots on 180mm/7" reel

REEL PACKAGING DETAILS

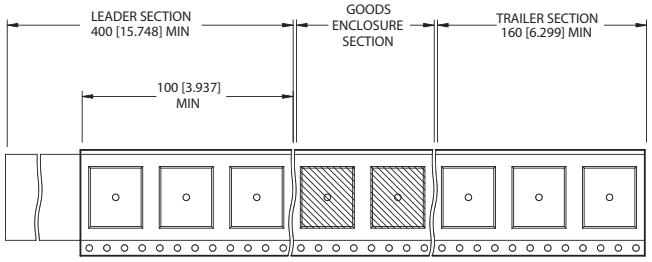

Reel Quantity: 7" - 23 or 13" - 92

TAPE OUTLINE DIMENSIONS

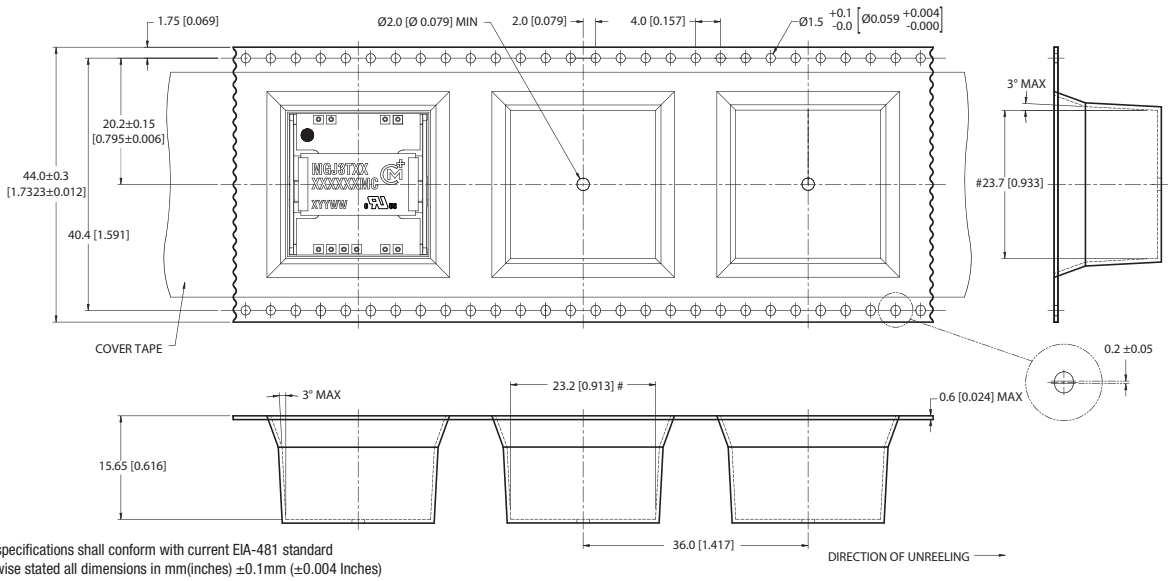

Tape & Reel specifications shall conform with current EIA-481 standard
Unless otherwise stated all dimensions in mm(inches) ±0.1mm (±0.004 Inches)
Controlling dimension is mm
Components shall be orientated within the carrier tape as indicated
Measured on a plane 0.3mm above the bottom pocket

Murata Power Solutions, Inc.
11 Cabot Boulevard, Mansfield, MA 02048-1151 U.S.A.
ISO 9001 and 14001 REGISTERED

This product is subject to the following operating requirements and the Life and Safety Critical Application Sales Policy:
Refer to: http://www.murata-ps.com/requirements/

Murata Power Solutions, Inc. makes no representation that the use of its products in the circuits described herein, or the use of other technical information contained herein, will not infringe upon existing or future patent rights. The descriptions contained herein do not imply the granting of licenses to make, use, or sell equipment constructed in accordance therewith. Specifications are subject to change without notice.
© 2016 Murata Power Solutions, Inc.